MITSUBISHI ELECTRIC

SPLIT-TYPE AIR CONDITIONERS

INDOOR UNIT

No. TBH266

SERVICE MANUAL

Models

MSZ-EX09NL2W - U1
MSZ-EX12NL2W - U1
MSZ-EX15NL2W - U1
MSZ-EX18NL2W - U1
MSZ-EX09NL2B - U1
MSZ-EX12NL2B - U1
MSZ-EX15NL2B - U1
MSZ-EX18NL2B - U1
MSZ-EX09NL2S - U1
MSZ-EX12NL2S - U1
MSZ-EX15NL2S - U1
MSZ-EX18NL2S - U1

Outdoor unit service manual
MXZ- •D•NL Series (OBH949A)
MXZ- •D•NLHZ Series (OBH949A)
MXZ-SM•NL Series (OCH819D)
MXZ-SM•NLHZ Series (OCH819D)
SUZ-AA•NL Series (TCH142C)
SUZ-AA•NLH2 Series (TCH142C)

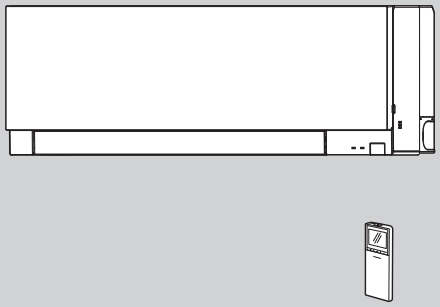

CONTENTS

1. TECHNICAL CHANGES ····· 2
2. SERVICING PRECAUTIONS FOR UNITS USING REFRIGERANT R454B ····· 3
3. PART NAMES AND FUNCTIONS ····· 8
4. SPECIFICATION ····· 9
5. OUTLINES AND DIMENSIONS ····· 11
6. WIRING DIAGRAM ····· 12
7. REFRIGERANT SYSTEM DIAGRAM ····· 13
8. SERVICE FUNCTIONS ····· 14
9. MICROPROCESSOR CONTROL ····· 18
10. TROUBLESHOOTING ····· 26
11. DISASSEMBLY INSTRUCTIONS ····· 41

PARTS CATALOG (TBB266)

Use the specified refrigerant only

Never use any refrigerant other than that specified.

Doing so may cause a burst, an explosion, or fire when the unit is being used, serviced, or disposed of.
Correct refrigerant is specified in the manuals and on the spec labels provided with our products.
We will not be held responsible for mechanical failure, system malfunction, unit breakdown or accidents caused by failure to follow the instructions.

<Preparation before the repair service>

- Prepare the proper tools.
- Prepare the proper protectors.
- Provide adequate ventilation.
- After stopping the operation of the air conditioner, turn off the power-supply breaker and pull the power plug.
- Discharge the capacitor before the work involving the electric parts.

<Precautions during the repair service>

- Do not perform the work involving the electric parts with wet hands.
- Do not pour water into the electric parts.
- Do not touch the refrigerant.
- Do not touch the hot or cold areas in the refrigeration cycle.
- When the repair or the inspection of the circuit needs to be done without turning off the power, exercise great caution not to touch the live parts.

⚠ WARNING

- **When the refrigeration circuit has a leak, do not execute pump down with the compressor.**
- **When pumping down the refrigerant, stop the compressor before disconnecting the refrigerant pipes. The compressor may burst if air etc. get into it.**
- **When opening or closing the valve below freezing temperatures, refrigerant may spurt out from the gap between the valve stem and the valve body, resulting in injuries.**

1 TECHNICAL CHANGES

MSZ-EX09NL2W - U1 **MSZ-EX12NL2W - U1** **MSZ-EX15NL2W - U1** **MSZ-EX18NL2W - U1**
MSZ-EX09NL2B - U1 **MSZ-EX12NL2B - U1** **MSZ-EX15NL2B - U1** **MSZ-EX18NL2B - U1**
MSZ-EX09NL2S - U1 **MSZ-EX12NL2S - U1** **MSZ-EX15NL2S - U1** **MSZ-EX18NL2S - U1**

1. New model

2 SERVICING PRECAUTIONS FOR UNITS USING REFRIGERANT R454B

Servicing precautions for units using refrigerant R454B

Refrigerant Safety Group A2L **WARNING**

This unit uses a flammable refrigerant.
If refrigerant leaks and comes in contact with fire or heating part, it will create harmful gas and there is risk of fire.

Do not use means to accelerate the defrosting process or to clean, other than those recommended by the manufacturer.
The appliance should not be stored in a room with continuously operating ignition sources (for example: open flames, an operating gas appliance, or an operating electric heater).
Do not pierce or burn.
Be aware that refrigerants may not contain an odor.
- Maintenance, service and repair operations shall be performed by authorized technician with required qualification.
- Servicing shall be performed only by methods recommended by the manufacturer.
- Refrigerant piping shall be protected from physical damage.
- Field installed piping should be kept to a minimum.
- Compliance with national gas regulations shall be observed.
- All field joints shall be accessible for inspection prior to being covered or enclosed.

⚠ WARNING

- The mounting height of indoor unit shall be 5.9 ft (1.8 m) or more from the floor. Up to 7.5 ft (2.3 m) is recommended.
- The unit shall be installed in rooms exceed the minimum room area (Amin) determined by total refrigerant amount (M).

NOTE: For the corresponding table of the branch box system, refer to the multi-unit installation manual.

SYSTEM WITHOUT BRANCH BOX

M			Amin	
[kg]	[lbs, oz]		[m²]	[ft²]
0.5	1	1	1.9	21
0.6	1	5	2.3	25
0.7	1	8	2.6	28
0.8	1	12	3.0	33
0.9	1	15	3.4	37
1.0	2	3	3.8	41
1.1	2	6	4.1	45
1.2	2	10	4.5	49
1.3	2	13	4.9	53
1.4	3	1	5.2	56
1.5	3	4	5.6	61
1.6	3	8	6.0	65

M			Amin	
[kg]	[lbs, oz]		[m²]	[ft²]
1.7	3	11	6.3	68
1.8	3	15	6.8	74
1.9	4	3	7.2	78
2.0	4	6	7.6	82
2.1	4	10	7.9	86
2.2	4	13	8.3	90
2.3	5	1	8.7	94
2.4	5	4	9.1	98
2.5	5	8	9.4	102
2.6	5	11	9.8	106
2.7	5	15	10.2	110
2.8	6	2	10.6	115

1. REFRIGERANT PIPE NITROGEN PRESSURE TEST METHOD

(1) Connect the testing tools.
- Make sure the stop valves are closed and do not open them.
- Add pressure to the refrigerant lines through the service port of the stop valve for GAS.

(2) Do not add pressure to the specified pressure all at once; add pressure little by little.
1. Pressurize to 0.5 MPa (73 psig, 5 kgf/cm²G), wait 5 minutes, and make sure the pressure does not decrease.
2. Pressurize to 1.5 MPa (218 psig, 15 kgf/cm²G), wait 5 minutes, and make sure the pressure does not decrease.
3. Pressurize to 4.15 MPa (601 psig, 41.5 kgf/cm²G) and measure the surrounding temperature and refrigerant pressure.

(3) If the specified pressure holds for 24 Hours and does not decrease, the pipes have passed the test and there are no leaks.
- If the surrounding temperature changes by 1°F (0.5°C), the pressure will change by about 1 psig (0.007 MPa). Make the necessary corrections.

(4) If the pressure decreases in steps (2) or (3), there is a gas leak. Look for the source of the gas leak.

2. REFRIGERANT SENSOR INSTALLATION AND REPLACEMENT

- For system with branch box, the refrigerant sensor shall be installed to the indoor unit before turning on the breaker. The refrigerant sensor is located inside the branch box package or can be ordered separately Parts Number MAC-100RS-E.
- When the refrigerant sensor is installed in the indoor unit, the system may stop operation if refrigerant leaks are detected.
- If the refrigerant sensor fails, replace the refrigerant sensor.
- The refrigerant sensor shall only be replaced with manufacturer approved sensor.
- If the refrigerant sensor error occurs even if the sensor is installed, check the cable connection for the sensor side and the main board side.

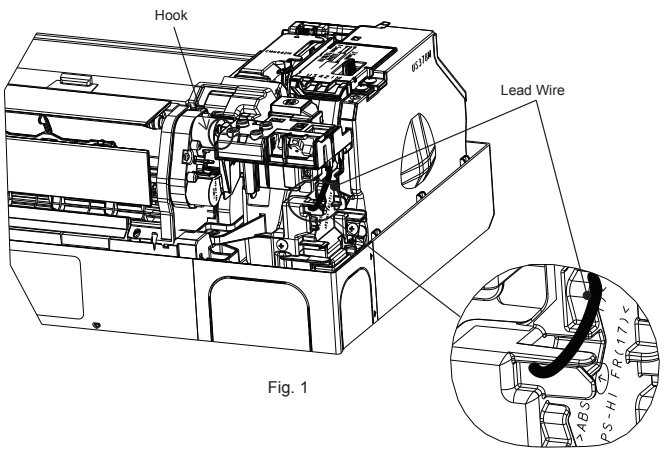

Fig. 1

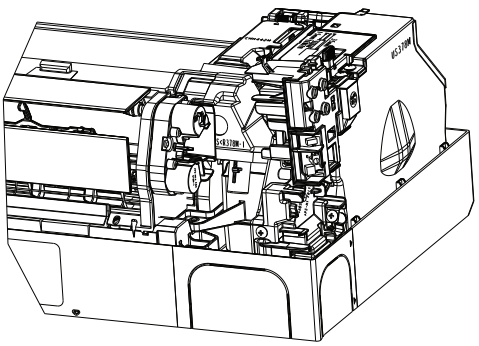

Fig. 2

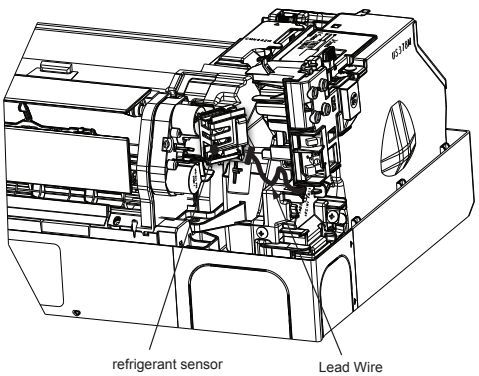

Fig. 3

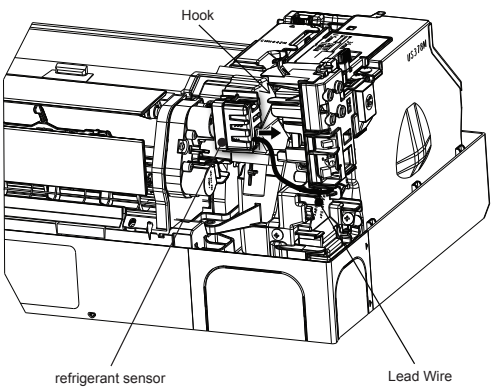

Fig. 4

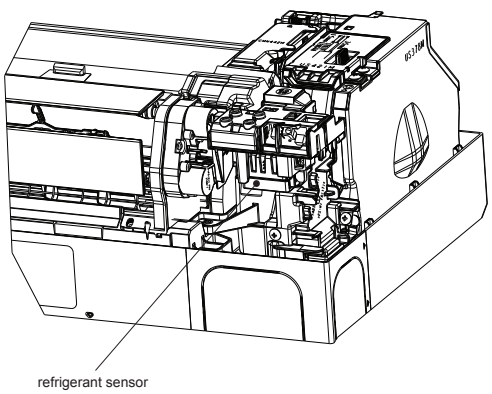

Fig. 5

1) Remove the panel
2) Take out the lead wire out of the hook. (Fig. 1)
3) Open DISP_GAS_HOLDER. (Fig. 2)
4) Connect the lead wire of refrigerant sensor. (Fig. 3)
5) Insert the refrigerant sensor and fix it with the hook. (Fig. 4)
6) Close DISP_GAS_HOLDER. (Fig. 5)

3. Cautions for the unit using R454B refrigerant

Basic work procedures are the same as those for conventional units using refrigerant R410A. However, pay careful attention to the following points.

■ Information on servicing

1. Checks to the area
Prior to beginning work on systems containing FLAMMABLE REFRIGERANTS, safety checks are necessary to ensure that the risk of ignition is minimized. For repair to the REFRIGERATING SYSTEM, 2 to 6 below shall be completed prior to conducting work on the system.

2. Work procedure
Work shall be undertaken under a controlled procedure so as to minimize the risk of a flammable gas or vapour being present while the work is being performed.

3. General work area
All maintenance staff and others working in the local area shall be instructed on the nature of work being carried out.
Work in confined spaces shall be avoided.

4. Checking for presence of refrigerant
The area shall be checked with an appropriate refrigerant detector prior to and during work, to ensure the technician is aware of potentially toxic or flammable atmospheres. Ensure that the leak detection equipment being used is suitable for use with all applicable refrigerants, i.e. non-sparking, adequately sealed or intrinsically safe.

5. Presence of fire extinguisher
If any hot work is to be conducted on the refrigerating equipment or any associated parts, appropriate fire extinguishing equipment shall be available to hand. Have a dry powder or CO2 fire extinguisher adjacent to the charging area.

6. No ignition sources
No person carrying out work in relation to a REFRIGERATING SYSTEM which involves exposing any pipe work shall use any sources of ignition in such a manner that it may lead to the risk of fire or explosion. All possible ignition sources, including cigarette smoking, should be kept sufficiently far away from the site of installation, repairing, removing and disposal, during which refrigerant can possibly be released to the surrounding space. Prior to work taking place, the area around the equipment is to be surveyed to make sure that there are no flammable hazards or ignition risks. “No Smoking” signs shall be displayed.

7. Ventilated area
Ensure that the area is in the open or that it is adequately ventilated before breaking into the system or conducting any hot work. A degree of ventilation shall continue during the period that the work is carried out. The ventilation should safely disperse any released refrigerant and preferably expel it externally into the atmosphere.

8. Checks to the refrigerating equipment
Where electrical components are being changed, they shall be fit for the purpose and to the correct specification. At all times the manufacturer’s maintenance and service guidelines shall be followed. If in doubt, consult the manufacturer’s technical department for assistance. The following checks shall be applied to installations using FLAMMABLE REFRIGERANTS:
- the actual REFRIGERANT CHARGE is in accordance with the room size within which the refrigerant containing parts are installed;
- the ventilation machinery and outlets are operating adequately and are not obstructed;
- marking to the equipment continues to be visible and legible. Markings and signs that are illegible shall be corrected;
- refrigerating pipe or components are installed in a position where they are unlikely to be exposed to any substance which may corrode refrigerant containing components, unless the components are constructed of materials which are inherently resistant to being corroded or are suitably protected against being so corroded.

9. Checks to electrical devices
Repair and maintenance to electrical components shall include initial safety checks and component inspection procedures. If a fault exists that could compromise safety, then no electrical supply shall be connected to the circuit until it is satisfactorily dealt with. If the fault cannot be corrected immediately but it is necessary to continue operation, an adequate temporary solution shall be used. This shall be reported to the owner of the equipment so all parties are advised.
Initial safety checks shall include:
- that capacitors are discharged: this shall be done in a safe manner to avoid possibility of sparking;
- that no live electrical components and wiring are exposed while charging, recovering or purging the system;
- that there is continuity of earth bonding.

■ **Repairs to sealed components**
Sealed electrical components shall be replaced.

■ **Repair to intrinsically safe components**
Intrinsically safe components must be replaced.

■ **Cabling**
Check that cabling will not be subject to wear, corrosion, excessive pressure, vibration, sharp edges or any other adverse environmental effects. The check shall also take into account the effects of aging or continual vibration from sources such as compressors or fans.

■ **Detection of flammable refrigerants**
Under no circumstances shall potential sources of ignition be used in the searching for or detection of refrigerant leaks. A halide torch (or any other detector using a naked flame) shall not be used.
The following leak detection methods are deemed acceptable for all refrigerant systems.
Electronic leak detectors may be used to detect refrigerant leaks but, in the case of FLAMMABLE REFRIGERANTS, the sensitivity may not be adequate, or may need re-calibration. (Detection equipment shall be calibrated in a refrigerant-free area.)
Ensure that the detector is not a potential source of ignition and is suitable for the refrigerant used.
Leak detection equipment shall be set at a percentage of the LFL of the refrigerant and shall be calibrated to the refrigerant employed, and the appropriate percentage of gas (25 % maximum) is confirmed.
Leak detection fluids are also suitable for use with most refrigerants but the use of detergents containing chlorine shall be avoided as the chlorine may react with the refrigerant and corrode the copper pipe-work.
If a leak is suspected, all naked flames shall be removed/extinguished.
If a leakage of refrigerant is found which requires brazing, all of the refrigerant shall be recovered from the system, or isolated (by means of shut off valves) in a part of the system remote from the leak.

■ **Removal and evacuation**
When breaking into the refrigerant circuit to make repairs - or for any other purpose -conventional procedures shall be used. However, for flammable refrigerants it is important that best practice be followed, since flammability is a consideration.
The following procedure shall be adhered to:
• safely remove refrigerant following local and national regulations;
• evacuate;
• purge the circuit with inert gas;
• evacuate;
• continuously flush or purge with inert gas when using flame to open circuit; and
• open the circuit.
The refrigerant charge shall be recovered into the correct recovery cylinders if venting is not allowed by local and national codes.
For appliances containing flammable refrigerants, the system shall be purged with oxygen-free nitrogen to render the appliance safe for flammable refrigerants. This process might need to be repeated several times.
Compressed air or oxygen shall not be used for purging refrigerant systems.
For appliances containing flammable refrigerants, refrigerants purging shall be achieved by breaking the vacuum in the system with oxygen-free nitrogen and continuing to fill until the working pressure is achieved, then venting to atmosphere, and finally pulling down to a vacuum.
This process shall be repeated until no refrigerant is within the system. When the final oxygen-free nitrogen charge is used, the system shall be vented down to atmospheric pressure to enable work to take place.
The outlet for the vacuum pump shall not be close to any potential ignition sources, and ventilation shall be available.

■ **Charging procedures**
In addition to conventional charging procedures, the following requirements shall be followed.
• Ensure that contamination of different refrigerants does not occur when using charging equipment. Hoses or lines shall be as short as possible to minimize the amount of refrigerant contained in them.
• Cylinders shall be kept in an appropriate position according to the instructions.
• Ensure that the REFRIGERATING SYSTEM is earthed prior to charging the system with refrigerant.
• Label the system when charging is complete (if not already).
• Extreme care shall be taken not to overfill the REFRIGERATING SYSTEM.
Prior to recharging the system, it shall be pressure-tested with the appropriate purging gas. The system shall be leak-tested on completion of charging but prior to commissioning. A follow up leak test shall be carried out prior to leaving the site.

■ **Decommissioning**

Before carrying out this procedure, it is essential that the technician is completely familiar with the equipment and all its detail. It is recommended good practice that all refrigerants are recovered safely. Prior to the task being carried out, an oil and refrigerant sample shall be taken in case analysis is required prior to re-use of recovered refrigerant. It is essential that electrical power is available before the task is commenced.

- Become familiar with the equipment and its operation.
- Isolate system electrically.
- Before attempting the procedure, ensure that:
  - mechanical handling equipment is available, if required, for handling refrigerant cylinders;
  - all personal protective equipment is available and being used correctly;
  - the recovery process is supervised at all times by a competent person;
  - recovery equipment and cylinders conform to the appropriate standards.
- Pump down refrigerant system, if possible.
- If a vacuum is not possible, make a manifold so that refrigerant can be removed from various parts of the system.
- Make sure that cylinder is situated on the scales before recovery takes place.
- Start the recovery machine and operate in accordance with instructions.
- Do not overfill cylinders (no more than 80 % volume liquid charge).
- Do not exceed the maximum working pressure of the cylinder, even temporarily.
- When the cylinders have been filled correctly and the process completed, make sure that the cylinders and the equipment are removed from site promptly and all isolation valves on the equipment are closed off.
- Recovered refrigerant shall not be charged into another REFRIGERATING SYSTEM unless it has been cleaned and checked.

■ **Labelling**

Equipment shall be labelled stating that it has been de-commissioned and emptied of refrigerant. The label shall be dated and signed. For appliances containing FLAMMABLE REFRIGERANTS, ensure that there are labels on the equipment stating the equipment contains FLAMMABLE REFRIGERANT.

■ **Recovery**

When removing refrigerant from a system, either for servicing or decommissioning, it is recommended good practice that all refrigerants are removed safely.

When transferring refrigerant into cylinders, ensure that only appropriate refrigerant recovery cylinders are employed. Ensure that the correct number of cylinders for holding the total system charge is available.

All cylinders to be used are designated for the recovered refrigerant and labelled for that refrigerant (i.e., special cylinders for the recovery of refrigerant). Cylinders shall be complete with pressure-relief valve and associated shut-off valves in good working order.

Empty recovery cylinders are evacuated and, if possible, cooled before recovery occurs.

The recovery equipment shall be in good working order with a set of instructions concerning the equipment that is at hand and shall be suitable for the recovery of the flammable refrigerant.

If in doubt, the manufacturer should be consulted. In addition, a set of calibrated weighing scales shall be available and in good working order. Hoses shall be complete with leak-free disconnect couplings and in good condition.

The recovered refrigerant shall be processed according to local legislation in the correct recovery cylinder, and the relevant waste transfer note arranged. Do not mix refrigerants in recovery units and especially not in cylinders.

If compressors or compressor oils are to be removed, ensure that they have been evacuated to an acceptable level to make certain that FLAMMABLE REFRIGERANT does not remain within the lubricant.

The compressor body shall not be heated by an open flame or other ignition sources to accelerate this process. When oil is drained from a system, it shall be carried out safely.

3 PART NAMES AND FUNCTIONS

MSZ-EX09NL2W MSZ-EX12NL2W MSZ-EX15NL2W MSZ-EX18NL2W
MSZ-EX09NL2B MSZ-EX12NL2B MSZ-EX15NL2B MSZ-EX18NL2B
MSZ-EX09NL2S MSZ-EX12NL2S MSZ-EX15NL2S MSZ-EX18NL2S

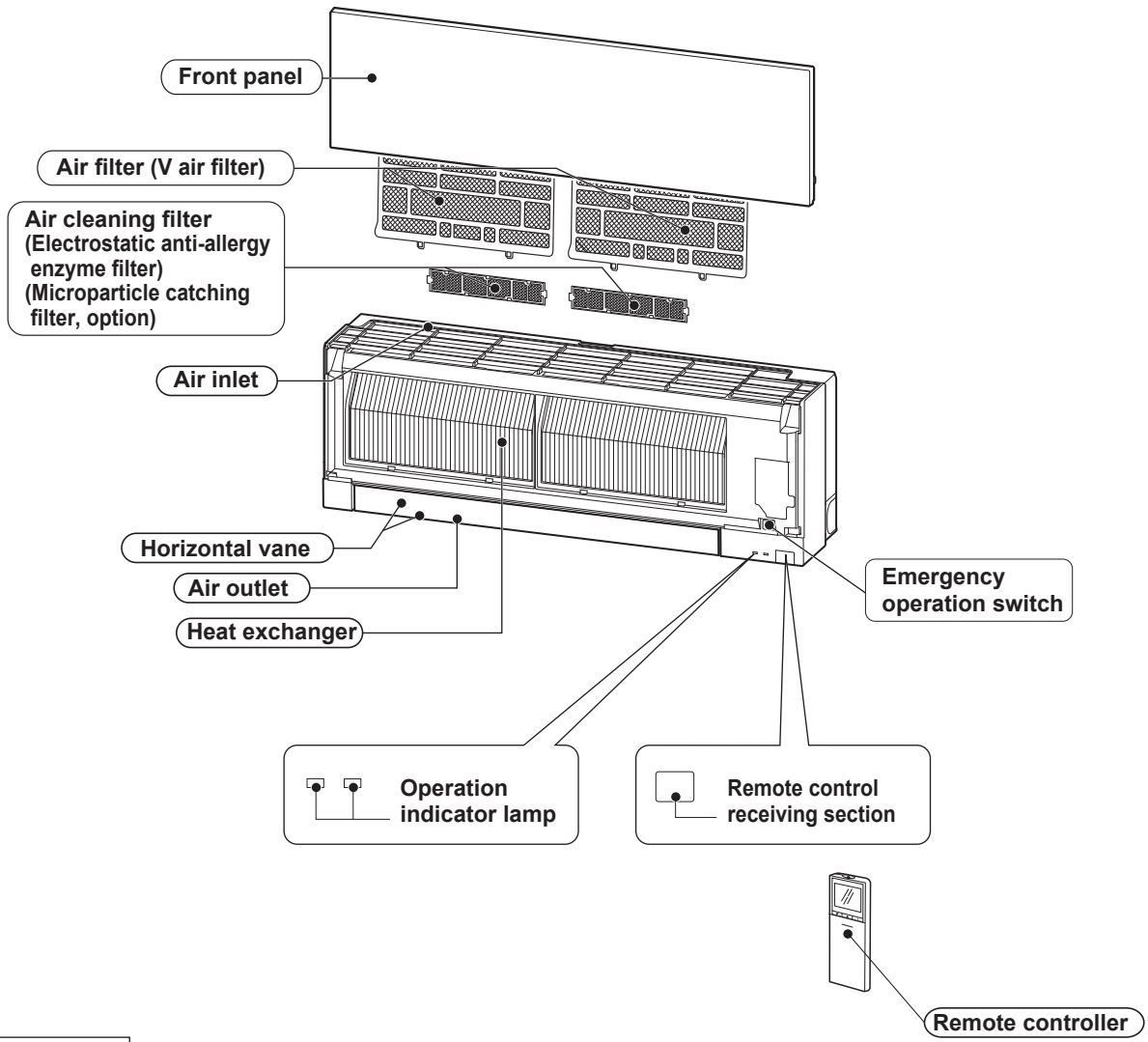

ACCESSORIES

	Model	MSZ-EX09NL2W MSZ-EX09NL2B MSZ-EX09NL2S	MSZ-EX12NL2W MSZ-EX12NL2B MSZ-EX12NL2S	MSZ-EX15NL2W MSZ-EX15NL2B MSZ-EX15NL2S	MSZ-EX18NL2W MSZ-EX18NL2B MSZ-EX18NL2S
①	Installation plate	1			
②	Installation plate fixing screw 4 × 25 mm	5			
③	Remote controller holder	1			
④	Fixing screw for ③ 3.5 × 16 mm (Black)	2			
⑤	Battery (AAA) for remote controller	2			
⑥	Wireless remote controller	1			
⑦	Felt tape (For left or left-rear piping)	1			
⑧	Soft dry cloth (NAB type only)	1			
⑨	Air cleaning filter	2			

4 SPECIFICATION

Indoor unit model			MSZ-EX09NL2W MSZ-EX09NL2B MSZ-EX09NL2S	MSZ-EX12NL2W MSZ-EX12NL2B MSZ-EX12NL2S	MSZ-EX15NL2W MSZ-EX15NL2B MSZ-EX15NL2S	MSZ-EX18NL2W MSZ-EX18NL2B MSZ-EX18NL2S
Power supply	V, phase, Hz		208/230 , 1 , 60			
Disconnect switch		A	15			
Min. circuit ampacity		A	1.0			
Fan motor		hp	0.040			
Airflow Super high - High - Med. - Low - Quiet	COOL Dry (Wet)	CFM	391 - 305 - 228 - 164 - 143 (352 - 274 - 205 - 147 - 128)	391 - 305 - 228 - 164 - 143 (352 - 274 - 205 - 147 - 128)	382 - 330 - 280 - 240 - 208 (344 - 297 - 252 - 216 - 188)	408 - 343 - 288 - 248 - 208 (367 - 309 - 259 - 223 - 188)
	HEAT Dry	CFM	448 - 244 - 205 - 164 - 143	479 - 244 - 205 - 164 - 143	479 - 347 - 284 - 228 - 197	497 - 347 - 313 - 264 - 232
Moisture removal		pt./h	—	—	—	—
Sound level Super high - High - Med. - Low - Quiet	Cooling	dB(A)	—	—	—	—
	Heating	dB(A)	—	—	—	—
Cond. drain connection O.D.		in.	5/8			
Dimensions	W	in.	34-13/16			
	D		7-11/16			
	H		11-3/4			
Weight		lb.	26			
External finish			W: Munsell 1.0Y 9.2/0.2 B: Munsell 3.7PB 2.0/0.1 S: Munsell 3.1PB 8.2/0.2			
Remote controller			Wireless type			
Control voltage (by built-in transformer)			12 - 24 V DC			

NOTE: Test conditions are based on AHRI 210/240.

4-1. OPERATING RANGE

(1) POWER SUPPLY

	Rated voltage	Guaranteed voltage (V)
Indoor unit	208/230 V 1 phase 60 Hz	Min. 187 — 208 — 230 — Max. 253

(2) OPERATION

Mode	Condition	Intake air temperature (°F)			
		Indoor		Outdoor	
		DB	WB	DB	WB
Cooling	Standard temperature	80	67	95	—
	Maximum temperature	90	73	115	—
	Minimum temperature	67	57	14	—
	Maximum humidity	78%		—	
Heating	Standard temperature	70	60	47	43
	Maximum temperature	80	67	75	65
	Minimum temperature	70	60	-13	-14

4-2. OUTLET AIR SPEED AND COVERAGE

Model	Mode	Function	Airflow (CFM)	Air speed (ft./s)	Coverage (ft.)
MSZ-EX09NL2W MSZ-EX09NL2B MSZ-EX09NL2S	HEAT	Dry	448	20.7	31.0
	COOL	Dry	391	18.1	27.2
		Wet	352	16.3	24.5
MSZ-EX12NL2W MSZ-EX12NL2B MSZ-EX12NL2S	HEAT	Dry	479	22.2	33.1
	COOL	Dry	391	18.1	27.2
		Wet	352	16.3	24.5
MSZ-EX15NL2W MSZ-EX15NL2B MSZ-EX15NL2S	HEAT	Dry	479	22.2	33.1
	COOL	Dry	382	17.7	26.6
		Wet	344	15.9	24.0
MSZ-EX18NL2W MSZ-EX18NL2B MSZ-EX18NL2S	HEAT	Dry	497	23.0	34.3
	COOL	Dry	408	18.9	28.4
		Wet	367	17.0	25.6

- The air coverage is the figure up to the position where the air speed is 1 ft./s, when air is blown out horizontally from the unit properly at the High speed position.
  The coverage should be used only as a general guideline since it varies according to the size of the room and furniture arranged inside the room.

5 OUTLINES AND DIMENSIONS

MSZ-EX09NL2W **MSZ-EX12NL2W** **MSZ-EX15NL2W** **MSZ-EX18NL2W**
MSZ-EX09NL2B **MSZ-EX12NL2B** **MSZ-EX15NL2B** **MSZ-EX18NL2B**
MSZ-EX09NL2S **MSZ-EX12NL2S** **MSZ-EX15NL2S** **MSZ-EX18NL2S**

Unit: inch

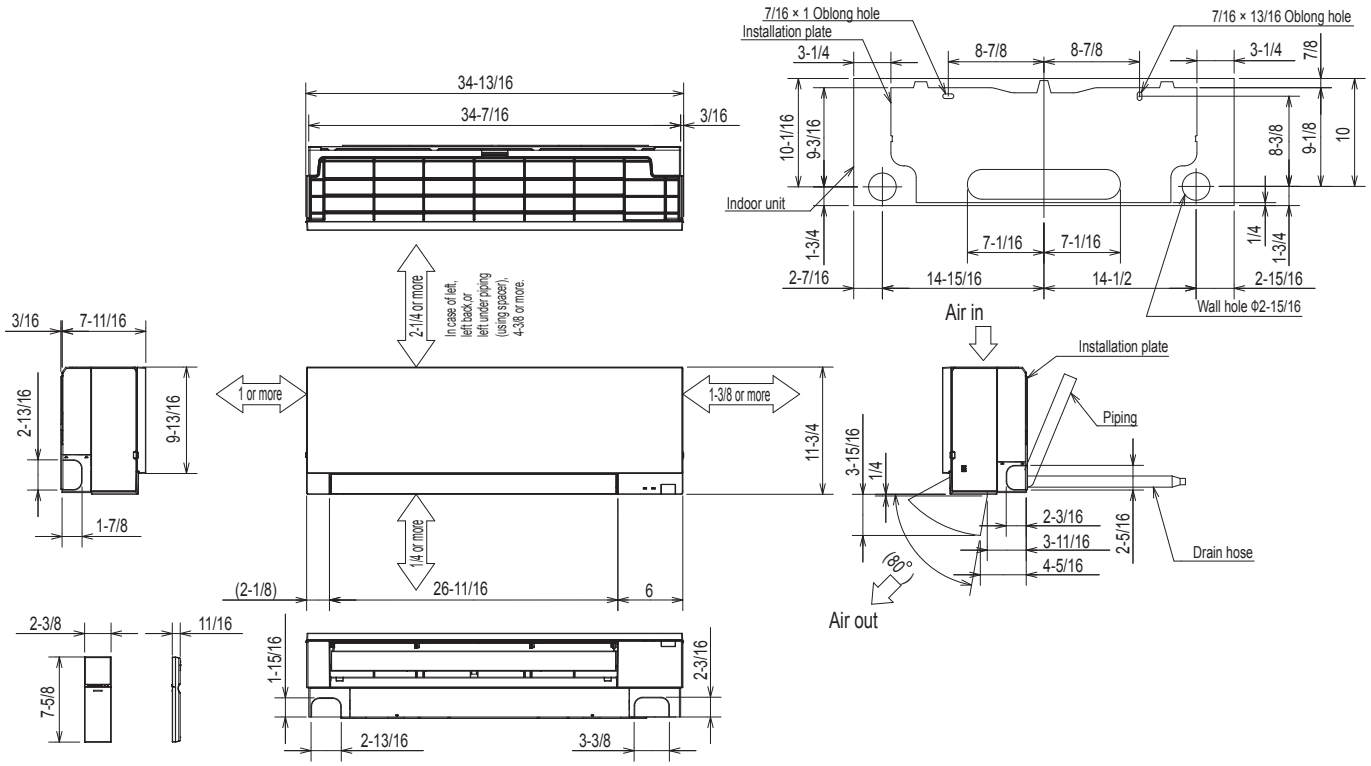

MSZ-EX09/12NL2

Piping	Insulation	φ1-7/16 O.D
	Liquid line	φ1/4 - 19-11/16 (Flared connection φ1/4)
	Gas line	φ3/8 - 16-15/16 (Flared connection φ3/8)
Drain hose		Insulation φ1-5/32 Connected part φ5/8 O.D active length 15-3/8

Note: Extension pipe size refer to the specifications table.

MSZ-EX15/18NL2

Piping	Insulation	φ1-7/16 O.D
	Liquid line	φ1/4 - 19-11/16 (Flared connection φ1/4)
	Gas line	φ3/8 - 16-15/16 (Flared connection φ1/2)
Drain hose		Insulation φ1-5/32 Connected part φ5/8 O.D active length 15-3/8

Note: Extension pipe size refer to the specifications table.

6 WIRING DIAGRAM

MSZ-EX09NL2W **MSZ-EX12NL2W** **MSZ-EX15NL2W** **MSZ-EX18NL2W**
MSZ-EX09NL2B **MSZ-EX12NL2B** **MSZ-EX15NL2B** **MSZ-EX18NL2B**
MSZ-EX09NL2S **MSZ-EX12NL2S** **MSZ-EX15NL2S** **MSZ-EX18NL2S**

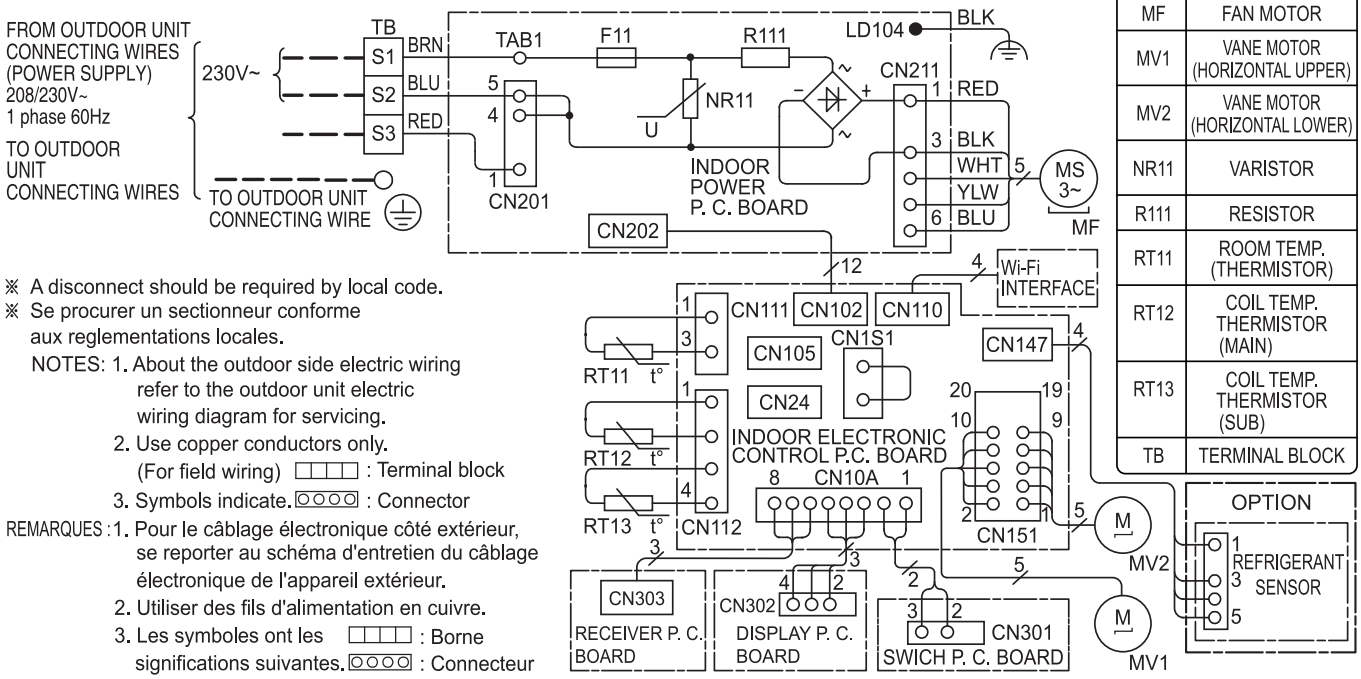

SYMBOL	NAME
F11	FUSE (T3.15AL250V)
MF	FAN MOTOR
MV1	VANE MOTOR (HORIZONTAL UPPER)
MV2	VANE MOTOR (HORIZONTAL LOWER)
NR11	VARISTOR
R111	RESISTOR
RT11	ROOM TEMP. (THERMISTOR)
RT12	COIL TEMP. THERMISTOR (MAIN)
RT13	COIL TEMP. THERMISTOR (SUB)
TB	TERMINAL BLOCK

※ A disconnect should be required by local code.
※ Se procurer un sectionneur conforme aux reglementations locales.

NOTES: 1. About the outdoor side electric wiring refer to the outdoor unit electric wiring diagram for servicing.
2. Use copper conductors only.
(For field wiring) ☐☐☐☐ : Terminal block
3. Symbols indicate. ○○○○ : Connector

REMARQUES : 1. Pour le câblage électronique côté extérieur, se reporter au schéma d'entretien du câblage électronique de l'appareil extérieur.
2. Utiliser des fils d'alimentation en cuivre.
3. Les symboles ont les ☐☐☐☐ : Borne significations suivantes. ○○○○ : Connecteur

7 REFRIGERANT SYSTEM DIAGRAM

MSZ-EX09NL2W **MSZ-EX12NL2W** **MSZ-EX15NL2W** **MSZ-EX18NL2W**
MSZ-EX09NL2B **MSZ-EX12NL2B** **MSZ-EX15NL2B** **MSZ-EX18NL2B**
MSZ-EX09NL2S **MSZ-EX12NL2S** **MSZ-EX15NL2S** **MSZ-EX18NL2S**

Unit: inch (mm)

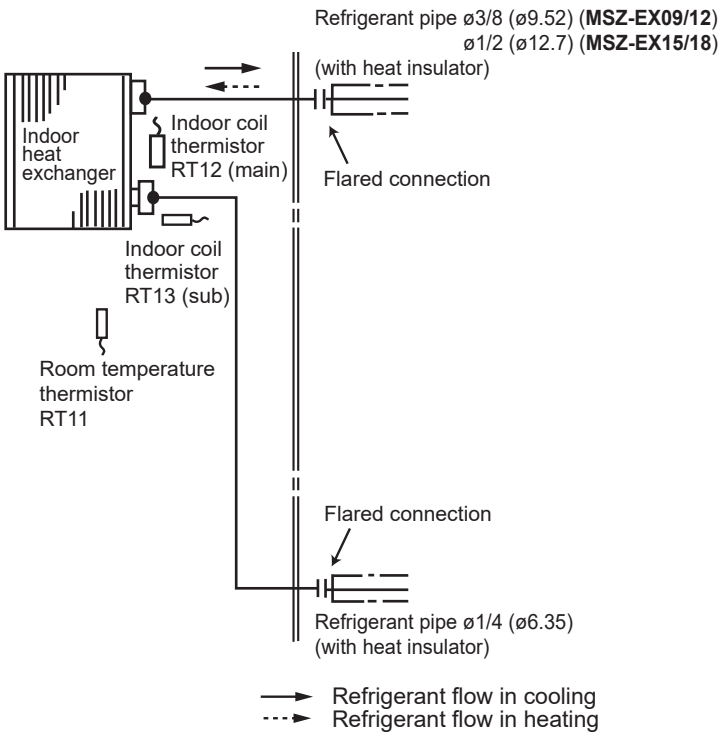

8 SERVICE FUNCTIONS

MSZ-EX09NL2W	**MSZ-EX12NL2W**	**MSZ-EX15NL2W**	**MSZ-EX18NL2W**
MSZ-EX09NL2B	**MSZ-EX12NL2B**	**MSZ-EX15NL2B**	**MSZ-EX18NL2B**
MSZ-EX09NL2S	**MSZ-EX12NL2S**	**MSZ-EX15NL2S**	**MSZ-EX18NL2S**

8-1. TIMER SHORT MODE

For service, the following set time can be shortened by bridging JPG and JPS on the electronic control P.C. board. (Refer to 10-7.)

- The set time for the ON/OFF timer can be reduced to 1 second for each minutes.
- After the breaker is turned on, the time for starting the compressor, which normally takes 3 minuets, can be reduced to 3 seconds. Restarting the compressor, which takes 3 minuets, cannot be reduced.

8-2. HOW TO SET REMOTE CONTROLLER EXCLUSIVELY FOR A PARTICULAR INDOOR UNIT

A maximum of 4 indoor units with wireless remote controllers can be used in a room.
To operate the indoor units individually with each remote controller, assign a number to each remote controller according to the number of the indoor unit.

This setting can be set only when all the following conditions are met:

- The remote controller is powered OFF.
- Weekly timer is not set.
- Weekly timer is not being edited.

(1) Hold down [1~4] button on the remote controller for 2 seconds to enter the pairing mode.
(2) Press [1~4] button again and assign a number to each remote controller.
Each press of [1~4] button advances the number in the following order: 1 → 2 → 3 → 4.
(3) Press [EDIT/SEND SET] button to complete the pairing setting.

After you turn the breaker ON, the remote controller that first sends a signal to an indoor unit will be regarded as the remote controller for the indoor unit.
Once they are set, the indoor unit will only receive the signal from the assigned remote controller afterwards.

8-3. AUTO RESTART FUNCTION

When the indoor unit is controlled with the remote controller, the operation mode, the set temperature, and the fan speed are memorized by the indoor electronic control P.C. board. “AUTO RESTART FUNCTION” automatically starts operation in the same mode just before the shutoff of the main power.

Operation

① If the main power has been cut, the operation settings remain.
② After the power is restored, the unit restarts automatically according to the memory.
(However, it takes at least 3 minutes for the compressor to start running.)

How to disable “AUTO RESTART FUNCTION”

① Turn off the main power for the unit.
② Cut the jumper wire to JR77 on the indoor electronic control P.C. board. (Refer to 10-7.)

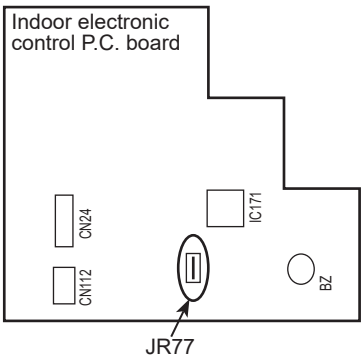

NOTE:

- The operation settings are memorized when 10 seconds have passed after the indoor unit was operated with the remote controller.
- If main power is turned OFF or a power failure occurs while AUTO START/STOP timer is active, the timer setting is cancelled.
- If the unit has been off with the remote controller before power failure, the auto restart function does not work as the power button of the remote controller is OFF.
- To prevent breaker OFF due to the rush of starting current, systematize other home appliance not to turn ON at the same time.
- When some air conditioners are connected to the same supply system, if they are operated before power failure, the starting current of all the compressors may flow simultaneously at restart.
  Therefore, the special counter-measures are required to prevent the main voltage-drop or the rush of the starting current by adding to the system that allows the units to start one by one.

8-4.APP CONTROL

1. Radio wave usage precautions

Contains FCC ID: NKR-MB20
Contains IC : 4441A-MB20

⚠ CAUTION	
⃠	• Changes or modifications not expressly approved by the party responsible for compliance could void the user's authority to operate the equipment. This device must not be co-located or operating in conjunction with any other antenna or transmitter.
	• This device complies with FCC/IC radiation exposure limits set forth for an uncontrolled environment and meets the FCC radio frequency (RF) Exposure Guidelines and RSS-102 of the IC radio frequency (RF) Exposure rules. This device should be installed and operated keeping the radiator at least 7-7/8 in. (20 cm) or more away from person's body.
	• This device complies with part 15 of the FCC Rules and Industry Canada license-exempt RSSs. Operation is subject to the following two conditions: (1) This device may not cause harmful interference; and (2) This device must accept any interference received, including interference that may cause undesired operation.
	NOTE: This device has been tested and found to comply with the limits for a Class B digital device, pursuant to part 15 of the FCC Rules. These limits are designed to provide reasonable protection against harmful interference in a residential installation. This equipment generates, uses and can radiate radio frequency energy and, if not installed and used in accordance with the instructions, may cause harmful interference to radio communications. However, there is no guarantee that interference will not occur in a particular installation. If this equipment does cause harmful interference to radio or television reception, which can be determined by turning the equipment off and on, the user is encouraged to try to correct the interference by one or more of the following measures: • Reorient or relocate the receiving antenna. • Increase the separation between the equipment and receiver. • Connect the equipment into an outlet on a circuit different from that to which the receiver is connected. • Consult the dealer or an experienced radio/TV technician for help.

2. Setting up

2-1. Click the link or scan the QR code below to download the app.

https://qrco.de/ComfortAppDownload

2-2. Click the link or scan the QR code below to visit the app help site.

https://qrco.de/ComfortApp

3. When it doesn't connect well

Check the following, and pair the Wireless LAN module and the Router.

- Verify that the indoor unit is operational by turning it on and sending a command with the handheld remote controller.
- Verify that the router is connected to the internet.
- Verify that the Wireless Interface is not located too far away from the router. The signal strength will be shown in the app when attempting to connect.
- Verify that the Wireless Interface is connected to a 2.4 GHz network or dual band network. The Wireless Interface cannot be connected to 5 GHz only networks.
- Veryfy that the number of connected devices to the Router does not exceed the limit.

3-1. Reconnect the Wireless Network

The Wireless Interface will automatically enter network configuration mode when powered on for the first time. To restart network configuration mode after the timer has expired, follow the steps below using the handheld remote controller included with the indoor unit. These steps can also be used to connect the Wireless Interface to a new router when replacing an existing router.

Sending "‾3" with the remote controller switches the connection mode.

- Press ⏻OFF/ON to stop the operation.
- Hold down the Temperature ⊕ for 5 seconds.
- Select "‾ 3" by pressing Temperature ⊕ and ⊖.
- Point the remote controller toward the indoor unit and press the ⏻OFF/ON.

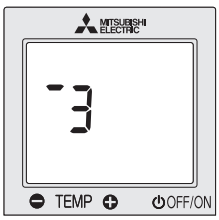

You can check the connection mode by the flashing state of the Connection mode LED (green light).

* The flashing state of the LED can change due to an update. Refer to the latest operation manual of the the app.

NOTE:

The connection modes and the lighting/flashing state of each mode can change due to an update. Refer to the latest operation manual of the app.

4. Checking the wireless setting status

You can check the transmission conditions with operation indicator lamp on indoor unit. Follow the procedure below when you cannot connect the wireless LAN module to the wireless network or transmission error occurs.

4-1. Wireless status display mode

- Press ⏻OFF/ON to stop the operation.
- Hold down Temperature ⊕ for 5 seconds.
- Select "‾ 9" by pressing Temperature ⊕ and ⊖.
- Point the remote controller toward the indoor unit and press the ⏻OFF/ON.

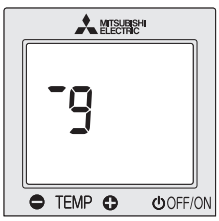

- Refer to the operation manual of the app for operation indicator lamp on indoor unit.

NOTE:

- When operating the air conditioner from a position where you cannot see it, check the air conditioner, its surroundings, and the conditions of people in the room in advance.
- When there are people in the room, please let them know in advance that you will be operating the air conditioner from a distance.
- Ensure that the Router supports the WPA2-AES encryption setting before starting the Wireless LAN module setup.
- The End user should read and accept the terms and conditions of the app service before using this Wireless LAN module.
- Use of the Wireless LAN module implies acceptance of our terms and conditions.
- To complete connection to the app physical access to the access point may be required.
- This Wireless LAN module will not commence transmission of any operational data from the system until the End user registers and accepts the terms and conditions of the Wi-Fi service.
- This Wireless LAN module should not be connected to any Mitsubishi Electric system which is to provide cooling or heating to critical applications.
- Mitsubishi Electric's wireless LAN module is designed to communicate with to Mitsubishi Electric's app.
  Mitsubishi Electric is not responsible for any (i) underperformance of a system or any product;
  (ii) system or product fault; or (iii) loss or damage to any system or product; which is caused by or arises from connection to and/or use of any third party wireless LAN module or any third party wireless or Wi-Fi service with Mitsubishi Electric equipment

The wireless LAN module uses Open Source Software. To view the Open Source software licence(s), please refer to the Licenses.
https://docs.kumocloud.com/software_licenses.pdf

"Wi-Fi", "WPA", "WPA2", "Wi-Fi Protected Setup" are trademarks or registered trademarks of the Wi-Fi Alliance.

5. Specifications

Wireless LAN module specifications

Wireless LAN-compatible standard	IEEE802.11b/g/n
RF channel	1ch to 11ch (2412 to 2462 MHz)
	0ch to 39ch (2402 to 2480 MHz)
Frequency Band	2.4GHz only
Security	WPA2-PSK
FCC ID	NKR-MB20
IC	4441A-MB20

9 MICROPROCESSOR CONTROL

MSZ-EX09NL2W **MSZ-EX12NL2W** **MSZ-EX15NL2W** **MSZ-EX18NL2W**
MSZ-EX09NL2B **MSZ-EX12NL2B** **MSZ-EX15NL2B** **MSZ-EX18NL2B**
MSZ-EX09NL2S **MSZ-EX12NL2S** **MSZ-EX15NL2S** **MSZ-EX18NL2S**

WIRELESS REMOTE CONTROLLER

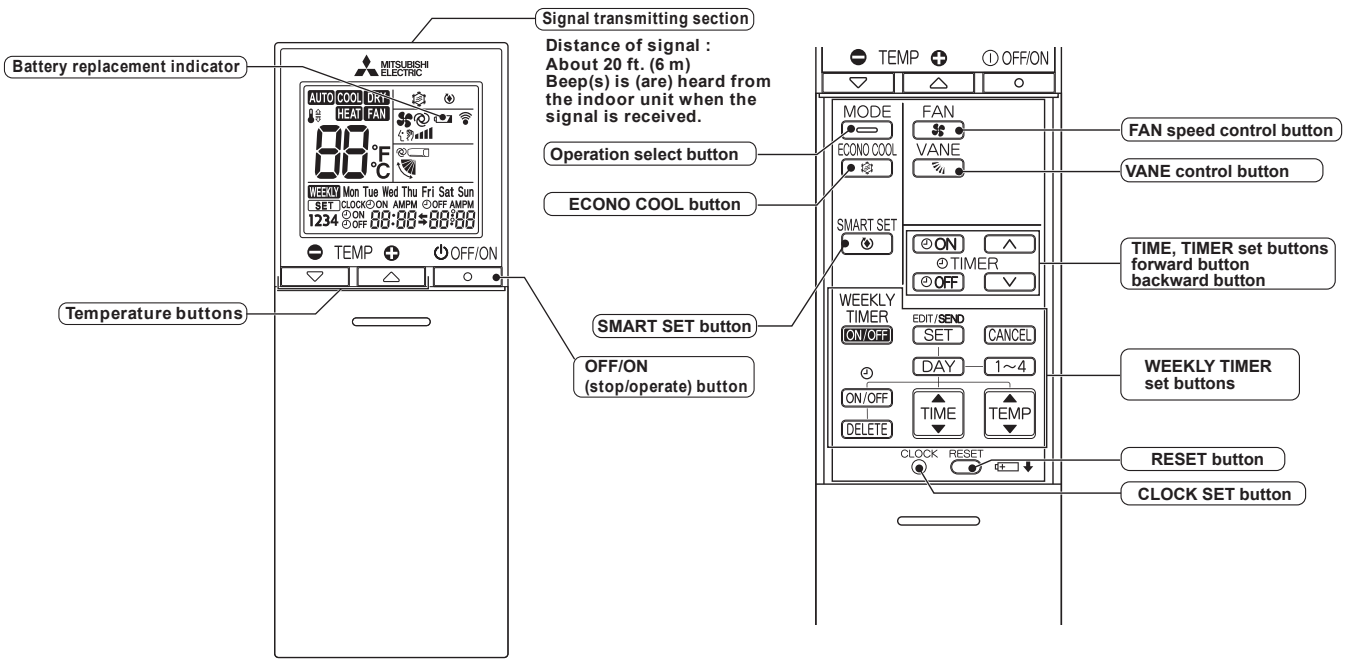

NOTE: Last setting will be stored after the unit is turned OFF with the remote controller. Indoor unit receives the signal of the remote controller with beeps.

INDOOR UNIT DISPLAY SECTION

Operation Indicator lamp

The operation indicator at the right side of the indoor unit indicates the operation state.

• The following indication applies regardless of shape of the indication.

Indication	Operation state	Room temperature
● ●	The unit is operating to reach the set temperature	About 4°F (2°C) or more away from set temperature
● ○	The room temperature is approaching the set temperature	About 2 to 4°F (1 to 2°C) from set temperature
● ☼	Standby mode (Only during multi system operation)	—

● Lit
☼ Blinking
○ Not lit

9-1. COOL (❄) OPERATION

(1) Press OFF/ON (stop/operate) button.
OPERATION INDICATOR lamp of the indoor unit turns on with a beep tone.
(2) Select COOL mode with Operation select button.
(3) Press Temperature buttons TEMP ⊖ or ⊕ button to select the desired temperature.
The setting range is 61 - 88°F (16 - 31°C).

1. Coil frost prevention

The compressor operational frequency is controlled by the temperature of the indoor heat exchanger to prevent the coil from frosting.
When the temperature of indoor heat exchanger becomes too low, the coil frost prevention mode works.
The indoor fan operates at the set speed and the compressor stops. This mode continues until the temperature of indoor heat exchanger rises.

2. Low outside temperature operation

When the outside temperature is lower, low outside temperature operation starts, and the outdoor fan slows or stops.

3. Indoor fan speed control

When the thermostat turns OFF, the indoor fan operates very Low to reduce power consumption.
When the room temperature rises and the thermostat is ON, the indoor fan operates according to the settings on the remote controller.

9-2. DRY (💧) OPERATION

(1) Press OFF/ON (stop/operate) button.
OPERATION INDICATOR lamp of the indoor unit turns on with a beep tone.
(2) Select DRY mode with Operation select button.
(3) The set temperature is determined from the initial room temperature.

1. Coil frost prevention

Coil frost prevention works the same way as that in COOL mode. (9-1.1.)

2. Low outside temperature operation

Low outside temperature operation works the same way as that in COOL mode. (9-1.2.)

3. Indoor fan speed control

Indoor fan speed control works the same way as that in COOL mode. (9-1.3.)

9-3. FAN (✤) OPERATION

(1) OPERATION INDICATOR lamp of the indoor unit turns on with a beep tone.
(2) Select FAN mode with Operation select button.
(3) Select the desired fan speed. When AUTO, it becomes Low.
Only indoor fan operates.
Outdoor unit does not operate.

9-4. HEAT (☼) OPERATION

(1) Press OFF/ON (stop/operate) button.
OPERATION INDICATOR lamp of the indoor unit turns on with a beep tone.
(2) Select HEAT mode with Operation select button.
(3) Press Temperature buttons TEMP ⊖ or ⊕ button to select the desired temperature.
The setting range is 50 - 88°F (10 - 31°C).

1. Cold air prevention control

When the compressor is not operating or is starting, and the temperature of indoor heat exchanger and/or the room temperature is low or when defrosting is being done, the indoor fan will stop or rotate in Very Low speed.

2. High pressure protection

The compressor operational frequency is controlled by the temperature of the indoor heat exchanger to prevent the condensing pressure from increasing excessively.
When the temperature of indoor heat exchanger becomes too high, the high pressure protection works.
The indoor fan operates following the cold air prevention control. This mode continues until the temperature of indoor heat exchanger falls.

3. Defrosting

Defrosting starts when the temperature of outdoor heat exchanger becomes too low.
The compressor stops once, the indoor/outdoor fans stop, the 4-way valve reverses, and the compressor re-starts.
This mode continues until the temperature of outdoor heat exchanger rises or the fixed time passes.

9-5. AUTO CHANGE OVER ··· AUTO MODE OPERATION

Once desired temperature is set, unit operation is switched automatically between COOL and HEAT operation.

Mode selection

(1) Initial mode

When unit starts the operation with AUTO operation from OFF:

- If the room temperature is higher than the set temperature, operation starts in COOL mode.
- If the room temperature is equal to or lower than the set temperature, operation starts in HEAT mode.

(2) Mode change

COOL mode changes to HEAT mode when about 15 minutes have passed with the room temperature 2°F (1°C) below the set temperature.

HEAT mode changes to COOL mode when about 15 minutes have passed with the room temperature 2°F (1°C) above the set temperature.

NOTE 1

If two or more indoor units are operating in multi system, there might be a case that the indoor unit, which is operating in (AUTO), cannot change over to the other operating mode (COOL ↔ HEAT) and becomes a state of standby.

Refer to **NOTE 2 "FOR MULTI SYSTEM AIR CONDITIONER"**.

NOTE 2

FOR MULTI SYSTEM AIR CONDITIONER

OUTDOOR UNIT: MXZ series

Multi system air conditioner can connect two or more indoor units with one outdoor unit.

- When you try to operate 2 or more indoor units with one outdoor unit simultaneously, one for the cooling and the others for heating, the operation mode of the indoor unit that operates first is selected. Other indoor units cannot operate, and operation indicator lamp blinks as shown in the figure below. In this case, please set all the indoor units to the same operation mode.

OPERATION INDICATOR

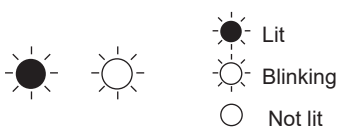

- When indoor unit starts the operation while the defrosting of outdoor unit is being done, it takes a few minutes (max. 10 minutes) to blow out the warm air.
- In the heating operation, though indoor unit that does not operate may get warm or the sound of refrigerant flowing may be heard, they are not malfunction. The reason is that the refrigerant continuously flows into it.

9-6. AUTO VANE OPERATION

1. Horizontal vane

(1) Vane motor drive

These models are equipped with a stepping motors for the horizontal vanes. The rotating direction, speed, and angle of the motor are controlled by pulse signals (approximately 12 V) transmitted from indoor microprocessor.

(2) The horizontal vane angle and mode change as follows by pressing VANE control button.

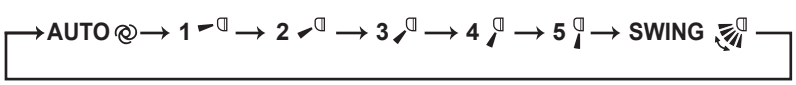

(3) Positioning

To confirm the standard position, the vane move until it touches the vane stopper. Then the vane is set to the selected angle.

Confirming of standard position is performed in the following cases:

(a) When the operation starts or finishes (including timer operation).

(b) When the test run starts.

(c) When standby mode (only during multi system operation) starts or finishes.

(4) VANE AUTO (@) mode

In VANE AUTO mode, the microprocessor automatically determines the vane angle to make the optimum room temperature distribution.

In COOL and DRY operation
Vane angle is fixed to Horizontal position.

In HEAT operation
Vane angle is fixed to Angle 4.

(5) STOP (operation OFF) and ON TIMER standby

In the following cases, the horizontal vane returns to the closed position.

(a) When OFF/ON (stop/operate) button is pressed (POWER OFF).
(b) When the operation is stopped by the emergency operation.
(c) When ON TIMER is ON standby.

(6) Dew prevention

During COOL or DRY operation with the vane angle at Angle 4 or 5 when the compressor cumulative operation time exceeds 1 hour, the vane angle automatically changes to Angle 3 for dew prevention.

(7) SWING ( ) mode

By selecting SWING mode with VANE control button, the horizontal vanes swing vertically.
When COOL, DRY or FAN mode is selected, only the upper vane swings.

(8) Cold air prevention in HEAT operation

The horizontal vane position is set to upward.

NOTE: When 2 or more indoor units are operated with multi outdoor unit, even if any indoor unit turns thermostat off, this control does not work in the indoor unit.

(9) ECONO COOL ( ) operation (ECONOmical operation)

When ECONO COOL button is pressed in COOL mode, set temperature is automatically set 4°F (2°C) higher by the microprocessor. However, the temperature on the LCD screen on the remote controller is not changed. Also the horizontal vane swings in various cycle.
SWING operation makes you feel cooler than set temperature. So, even though the set temperature is higher, the air conditioner can keep comfort. As a result, energy can be saved.
To cancel this operation, select a different mode or press one of the following buttons in ECONO COOL operation: ECONO COOL or VANE control button.

9-7. TIMER OPERATION

1. How to set the time

(1) Check that the current time is set correctly.

NOTE: Timer operation will not work without setting the current time. Initially “12:00 AM” blinks at the current time display of TIME MONITOR, so set the current time correctly with CLOCK button.

How to set the current time

(a) Press the CLOCK button.

(b) Press the TIME SET buttons (∧ and ∨) to set the current time.

- Each time forward button (∧) is pressed, the set time increases by 1 minute, and each time backward button (∨) is pressed, the set time decreases by 1 minute.
- Pressing those buttons longer, the set time increases/decreases by 10 minutes.

(c) Press the CLOCK set button.

(2) Press OFF/ON (stop/operate) button to start the air conditioner.

(3) Set the time of timer.

ON timer setting

(a) Press ON TIMER button(ON) during operation.

(b) Set the time of the timer using TIME SET buttons (∧ and ∨). *

OFF timer setting

(a) Press OFF TIMER button (OFF) during operation.

(b) Set the time of the timer using TIME SET buttons (∧ and ∨). *

* Each time forward button (∧) is pressed, the set time increases by 10 minutes: each time backward button (∨) is pressed, the set time decreases by 10 minutes.

2. To release the timer

To release ON timer, press ON TIMER button (ON).

To release OFF timer, press OFF TIMER button(OFF).

TIMER is cancelled and the display of set time disappears.

PROGRAM TIMER

- OFF timer and ON timer can be used in combination. The set time that is reached first will operate first.
- “➡” and “⬅” display shows the order of OFF timer and ON timer operation.

(Example 1) The current time is 8:00 PM.
The unit turns off at 11:00 PM, and on at 6:00 AM.

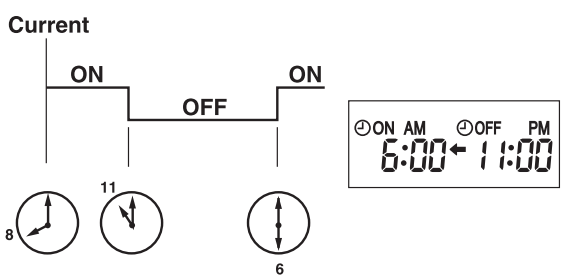

(Example 2) The current time is 11:00 AM.
The unit turns on at 5:00 PM, and off at 9:00 PM.

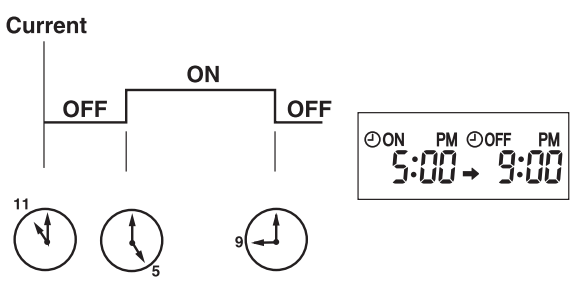

NOTE: If the main power is turned OFF or a power failure occurs while ON/OFF timer is active, the timer setting is cancelled. As these models are equipped with an auto restart function, the air conditioner starts operating with timer cancelled when power is restored.

9-8. WEEKLY TIMER OPERATION

• A maximum of 4 ON or OFF timers can be set for individual days of the week.
• A maximum of 28 ON or OFF timers can be set for a week.

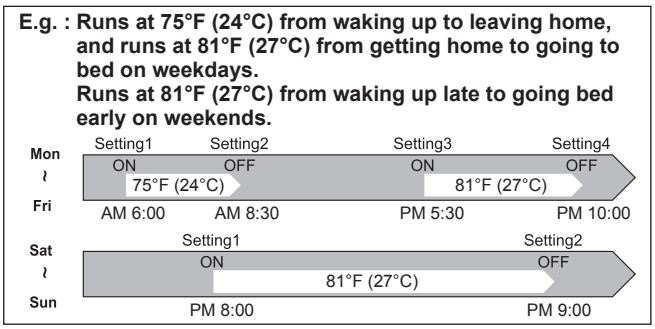

NOTE:

• The simple ON/OFF timer setting is available while the weekly timer is on. In this case, the ON/OFF timer has priority over the weekly timer; the weekly timer operation will start again after the simple ON/OFF timer is complete.
• When the weekly timer is set, temperature can not be set to 50°F (10°C).
• The weekly timer operation and SMART SET operation cannot be used together.

1. How to set the weekly timer

* Make sure that the current time and day are set correctly.

(1) Press [EDIT/SEND SET] button to enter the weekly timer setting mode.

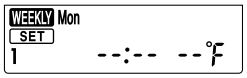

* [SET] blinks.

(2) Press [DAY] and [1~4] buttons to select setting day and number.

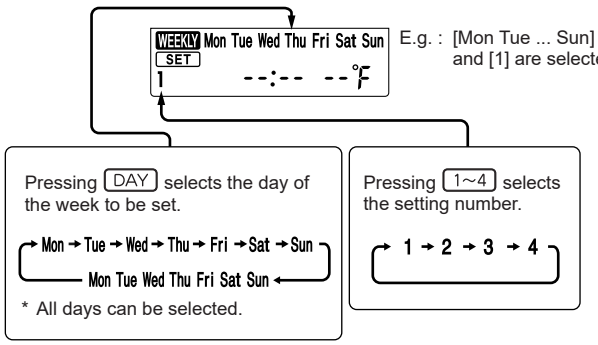

(3) Press [ON/OFF], [TIME], and [TEMP] buttons to set ON/OFF, time, and temperature.

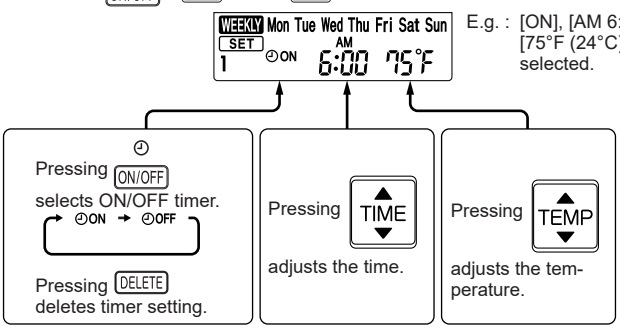

* Hold down the button to change the time quickly.
* The temperature can be set between 61°F and 88°F (16°C and 31°C) at weekly timer.

Press [DAY] and [1~4] buttons to continue setting the timer for other days and/or numbers.

(4) Press [EDIT/SEND SET] button to complete and transmit the weekly timer setting.

* [SET] which was blinking goes out, and the current time will be displayed.

NOTE:

- Press [EDIT/SEND SET] button to transmit the setting information of weekly timer to the indoor unit. Point the remote controller toward the indoor unit for 3 seconds.
- When setting the timer for more than one day of the week or one number, [EDIT/SEND SET] button does not have to be pressed per each setting. Press [EDIT/SEND SET] button once after all the settings are complete. All the weekly timer settings will be saved.
- Press [EDIT/SEND SET] button to enter the weekly timer setting mode, and press and hold [DELETE] button for 5 seconds to erase all weekly timer settings. Point the remote controller toward the indoor unit.

(5) Press [WEEKLY TIMER ON/OFF] button to turn the weekly timer ON. ([WEEKLY] lights.)

•When the weekly timer is ON, the day of the week whose timer setting is complete, will light.

Press [WEEKLY TIMER ON/OFF] button again to turn the weekly timer OFF. ([WEEKLY] goes out.)

NOTE:
The saved settings will not be cleared when the weekly timer is turned OFF.

2. Checking weekly timer setting

(1) Press [EDIT/SEND SET] button to enter the weekly timer setting mode.

*[SET] blinks.

(2) Press [DAY] or [1~4] buttons to view the setting of the particular day or number.

(3) Press [CANCEL] button to exit the weekly timer setting.

NOTE:
When all days of the week are selected to view the settings and a different setting is included among them, --:-- --°F will be displayed.

9-9. SMART SET (⊛) OPERATION

1. How to set SMART SET operation

(1) Press OFF/ON (stop/operate) button.
(2) Select COOL, HEAT or ECONO COOL mode.
(3) Press SMART SET button.
(4) Set the temperature, fan speed, and airflow direction for SMART SET operation.

NOTE:

- Select the appropriate temperature, fan speed, and airflow direction according to your room.
- SMART SET operation cannot be selected during DRY or AUTO mode operation.
- The setting range of HEAT mode SMART SET operation is 50°F (10°C) and 61 - 88°F (16 - 31°C).
- 2 groups of setting can be saved. (One for COOL/ECONO COOL, one for HEAT)
- SMART SET operation and the weekly timer operation cannot be used together.

2. How to cancel operation

- Press SMART SET button again.
- SMART SET operation can also be cancelled by pressing Operation select button to change the operation mode. The preferred setting can be saved for the next time with a single press of SMART SET button.
- SMART SET operation cannot be set on the weekly timer.

9-10. EMERGENCY/TEST OPERATION

In the case of test run operation or emergency operation, use the emergency operation switch on the right side of the indoor unit. Emergency operation is available when the remote controller is missing or has failed, or when the batteries in the remote controller are running down. The unit will start and OPERATION INDICATOR lamp will light up.
The first 30 minutes of operation is the test run operation. This operation is for servicing. The indoor fan runs at High speed and the temperature control does not work.
After 30 minutes of test run operation, the system shifts to EMERGENCY COOL/HEAT MODE with a set temperature of 75°F (24°C). The fan speed shifts to Med..
The coil frost prevention works even in the test run or the emergency operation.
In the test run or emergency operation, the horizontal vane operates in VANE AUTO (@) mode.
Emergency operation continues until the emergency operation switch is pressed once or twice or the unit receives any signal from the remote controller. In the latter case, normal operation will start.

NOTE: Do not press the emergency operation switch during normal operation.

Operation mode	COOL/HEAT
Set temperature	75°F (24°C)
Fan speed	Med.
Horizontal vane	Auto

The operation mode is indicated by the Operation Indicator lamp as follows.

Operation Indicator lamp

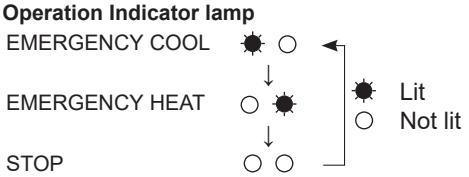

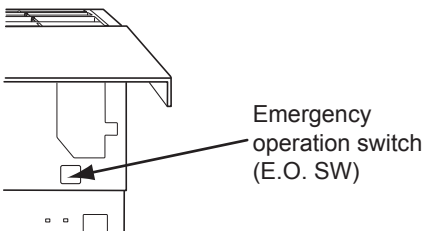

9-11. 3-MINUTE TIME DELAY OPERATION

When the system turns OFF, compressor will not restart for 3 minutes as 3-minute time delay function operates to protect compressor from overload.

9-12. Changing temperature indication (°F/°C)

- The preset unit is °F.
- °F → °C: Press RESET button while the temperature buttons are pressed.
- °C → °F: Press RESET button or remove the batteries .

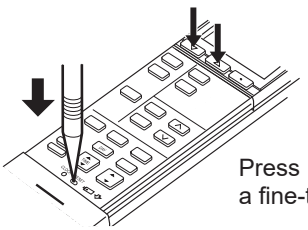

Press RESET button gently using a fine-tipped object.

10 TROUBLESHOOTING

MSZ-EX09NL2W	**MSZ-EX12NL2W**	**MSZ-EX15NL2W**	**MSZ-EX18NL2W**
MSZ-EX09NL2B	**MSZ-EX12NL2B**	**MSZ-EX15NL2B**	**MSZ-EX18NL2B**
MSZ-EX09NL2S	**MSZ-EX12NL2S**	**MSZ-EX15NL2S**	**MSZ-EX18NL2S**

10-1. CAUTIONS ON TROUBLESHOOTING

1. Before troubleshooting, check the following

1) Check the power supply voltage.
2) Check the indoor/outdoor connecting wire for miswiring.

2. Take care of the following during servicing

1) Before servicing the air conditioner, be sure to turn OFF the main unit first with the remote controller, and then after confirming the horizontal vane is closed, turn OFF the breaker and/or disconnect the power plug.
2) Be sure to turn OFF the power supply before removing the front panel, the cabinet, the top panel, and the P.C. board.
3) When removing the P.C. board, hold the edge of the board with care NOT to apply stress on the components.
4) When connecting or disconnecting the connectors, hold the connector housing. DO NOT pull the lead wires.

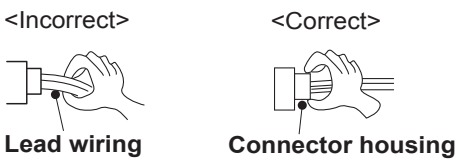

3. Troubleshooting procedure

1) Check if the OPERATION INDICATOR lamp on the indoor unit is blinking ON and OFF to indicate an abnormality.
   To make sure, check how many times the OPERATION INDICATOR lamp is blinking ON and OFF before starting service work.
2) Before servicing, verify that all connectors and terminals are connected properly.
3) When the electronic control P.C. board seems to be defective, check for disconnection of the copper foil pattern and burnt or discolored components.
4) When troubleshooting, Refer to 10-2, 10-3 and 10-4.

4. How to replace batteries

Weak batteries may cause the remote controller malfunction.
In this case, replace the batteries to operate the remote controller normally.

① Remove the front lid and insert batteries.
Then reattach the front lid.

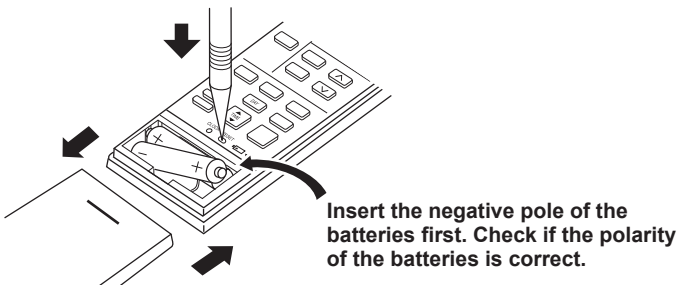

② Press RESET button with a fine-tipped object, and then use the remote controller.

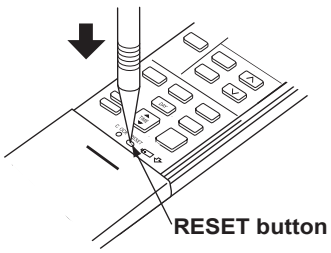

NOTE: 1. If RESET button is not pressed, the remote controller may not operate correctly.
2. This remote controller has a circuit to automatically reset the microprocessor when batteries are replaced.
This function is equipped to prevent the microprocessor from malfunctioning due to the voltage drop caused by the battery replacement.
3. Do not use the leaking batteries.

10-2. FAILURE MODE RECALL FUNCTION AND ERROR CODE DISPLAY MODE

Outline of the function

This air conditioner can memorize the failure which has occurred last time.

Even though LED indication listed on the troubleshooting check table (10-4.) disappears, the memorized failure can be recalled.

Also, error code can be checked on the display of remote controller while the upper operation indicator lamp on the indoor unit is blinking.

1. Flow chart of failure mode recall function for the indoor/outdoor unit

Operational procedure

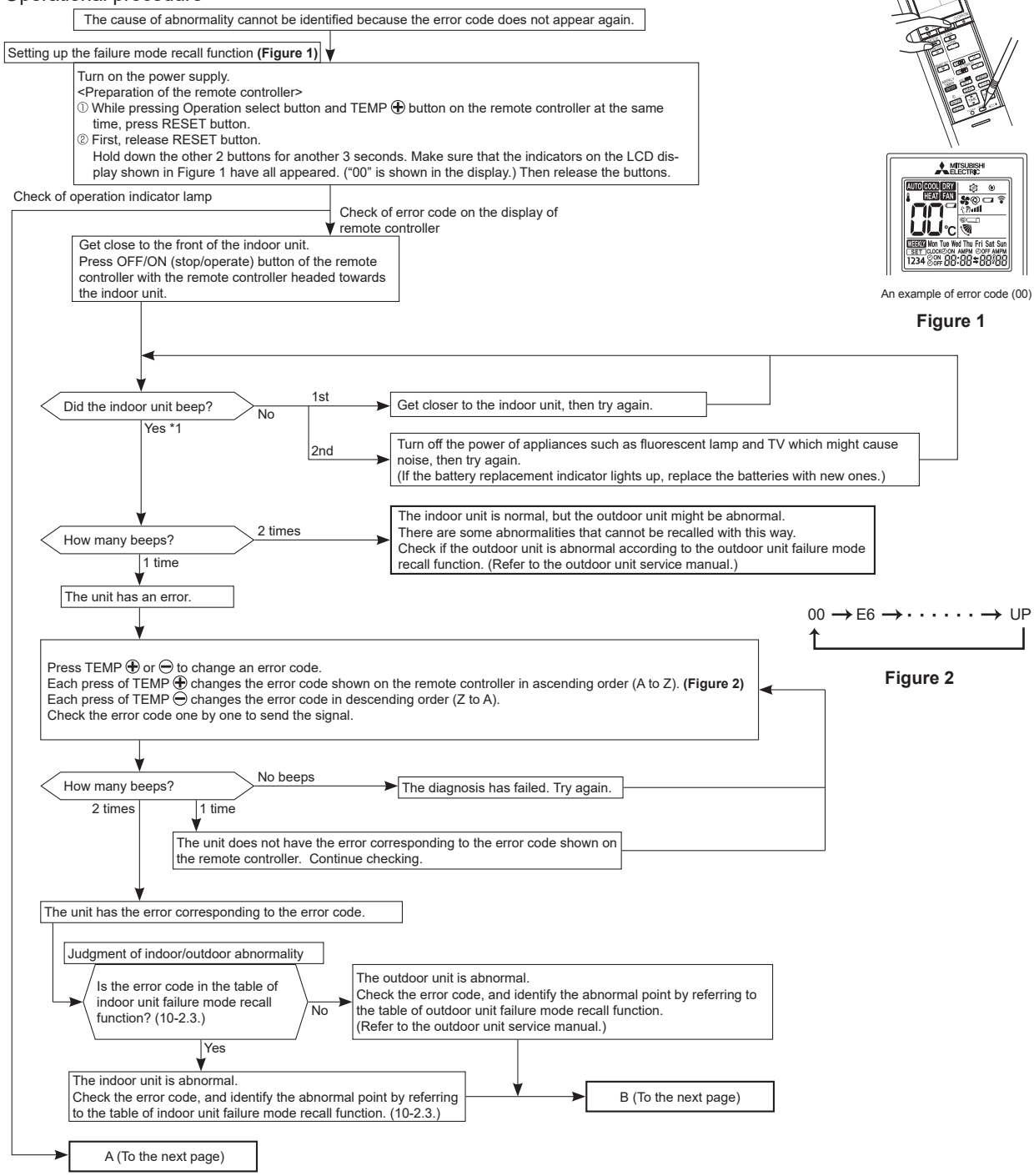

An example of error code (00)

Figure 1

Figure 2

A (From the previous page)

Press OFF/ON (stop/operate) button of the remote controller with the remote controller headed towards the indoor unit. *1.

Does the upper operation indicator lamp on the indoor unit blink at the interval of 0.5 seconds?

No (OFF) → The indoor unit is normal, but the outdoor unit might be abnormal.
There are some abnormalities that cannot be recalled with this way.
Check if the outdoor unit is abnormal according to the outdoor unit failure mode recall function. (Refer to the outdoor unit service manual.)

NOTE: It takes up to 1 minute to indicate the outdoor unit abnormality.
Even if the operation indicator lamp is not blinking, keep checking at least 1 minute or longer.

Yes (Blinks)

Judgment of indoor/outdoor abnormality

Before blinking, does the upper operation indicator lamp stay on for 3 seconds?

Yes → The outdoor unit is abnormal.
Check the blinking pattern, and identify the abnormal point by referring to the table of the outdoor unit failure mode recall function.
(Refer to the outdoor unit service manual.)
Make sure to check at least 2 consecutive blinking cycles. *3

No → The indoor unit is abnormal.
Check the blinking pattern, and identify the abnormal point by referring to the table of indoor unit failure mode recall function. (10-2.3.)
Make sure to check at least 2 consecutive blinking cycles. *2

B (From the previous page)

Releasing the failure mode recall function

Release the failure mode recall function by the following procedures.
Turn off the power supply and turn it on again.
Press RESET button of the remote controller.

Repair the failure parts.

Deleting the memorized abnormal condition

① After repairing the unit, recall the failure mode again according to “Setting up the failure mode recall function” mentioned above.
② Press OFF/ON (stop/operate) button of the remote controller with the remote controller headed towards the indoor unit.
③ Press the emergency operation switch so that the memorized abnormal condition is deleted.
④ Release the failure mode recall function according to “Releasing the failure mode recall function” mentioned above.

NOTE: 1. Make sure to release the failure mode recall function after it is set up, otherwise the unit cannot operate properly.
2. If the abnormal condition is not deleted from the memory, the last abnormal condition is kept memorized.

*1. Regardless of normal or abnormal condition, a short beep is emitted once the signal is received.

*2. Blinking pattern when the indoor unit is abnormal:

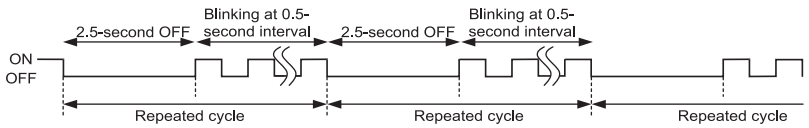

*3. Blinking pattern when the outdoor unit is abnormal:

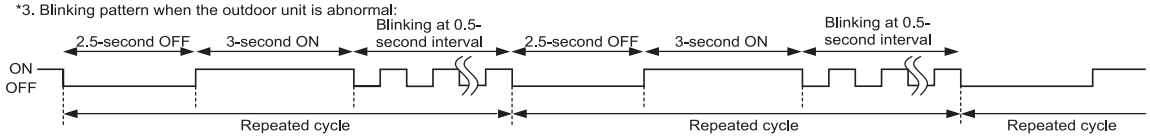

2. Flow chart of error code display mode

This explains how customers can check the error code on their own.
This is included in OPERATING INSTRUCTIONS.

Operational procedure

The remote controller is powered off.

Get close to the front of the indoor unit. Point the remote controller at the receiving section of the indoor unit, and keep pressing CHECK with a fine-tipped object. **(Figure 1)**
"00" is shown in the display. **(Figure 2)**
Keep pointing the remote controller at the receiving section of the indoor unit until the indoor unit beeps.

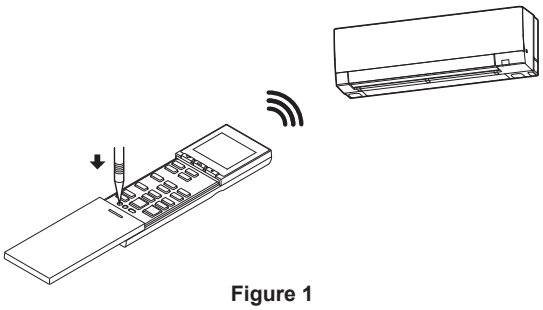

Figure 1

Did the indoor unit beep?

- No, 1st → Get closer to the indoor unit, then try again.
- No, 2nd → Turn off the power of appliances such as fluorescent lamp and TV which might cause noise, then try again.
  (If the battery replacement indicator lights up, replace the batteries with new ones.)
- Yes ↓

How many beeps?

- 2 times → The indoor unit is normal, but the outdoor unit might be abnormal. There are some abnormalities that cannot be recalled with this way. Check if the outdoor unit is abnormal according to the outdoor unit failure mode recall function. (Refer to the outdoor unit service manual.)
- 1 time ↓

The unit has an error.

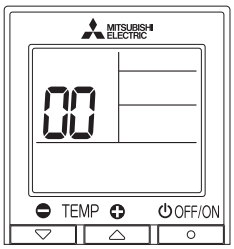

Figure 2

NOTE: Even though the air conditioner operates normally, the memorized indication for the last error appears if it has not been deleted.

Press TEMP ⊕ or ⊖ to change an error code.
Each press of TEMP ⊕ changes the error code shown on the remote controller in ascending order (A to Z). **(Figure 3)**
Each press of TEMP ⊖ changes the error code in descending order (Z to A).
Check the error code one by one to send the signal.

00 → E6 → · · · · · · → UP

Figure 3

How many beeps?

- No beeps → The diagnosis has failed. Try again.
- 1 time → The unit does not have the error corresponding to the error code shown on the remote controller. Continue checking.
- 2 times ↓

The unit has the error corresponding to the error code.

Refer to the error code on the table of indoor unit failure mode recall function (10-2.3.) or the table of outdoor unit failure mode recall function (refer to the outdoor unit service manual).

3. Table of indoor unit failure mode recall function

The left lamp of the operation indicator lamp	Error code	Abnormal point (Failure mode)	Condition	Remedy
Not lit	00	Normal	—	—
1-time blink every 0.5-second	P1	Room temperature thermistor	The room temperature thermistor short or open circuit is detected every 8 seconds during operation.	Refer to the characteristics of the room temperature thermistor (10-7.).
2-time blink 2.5-second OFF	P2 P9	Indoor coil thermistor	The indoor coil thermistor short or open circuit is detected every 8 seconds during operation.	Refer to the characteristics of the main indoor coil thermistor, the sub indoor coil thermistor (10-7.).
3-time blink 2.5-second OFF	E6 E7	Serial signal	The serial signal from outdoor unit is not received for a maximum of 6 minutes.	Refer to 10-6.Ⓓ “How to check miswiring and serial signal error”. Refer to “Check of compressor protector” of outdoor unit service manual.
4-time blink 2.5-second OFF	P4	Drain sensor	CN1S1 is open over 3 minutes.	Check CN1S1.
7-time blink 2.5-second OFF	EE	Combination of indoor and outdoor units	The refrigerant types specified for the indoor and outdoor units do not match.	The refrigerant types specified for the indoor and outdoor units do not match.
11-time blink 2.5-second OFF	Pb	Indoor fan motor	The rotational frequency feedback signal is not emitted for 12 seconds after the indoor fan motor is operated.	Refer to 10-6.Ⓐ “Check of the indoor fan motor”.
12-time blink 2.5-second OFF	Fb	Indoor control system	It cannot properly read data in the nonvolatile memory of the indoor electronic control P.C. board.	Replace the indoor electronic control P.C. board. “EE” error may be detected together with “Fb” error for the outdoor unit. When the indoor and outdoor units are connected in the allowed combination, respond only to “Fb” error.
14-time blink 2.5-second OFF 3-second ON	FH	Refrigerant sensor	The refrigerant sensor mounted on the indoor unit does not work. The refrigerant sensor is not connected properly or the wire is broken.	Connect the connector of the refrigerant sensor properly. Replace the refrigerant sensor.
14-time blink 2.5-second OFF 3-second ON	FL	Refrigerant leakage (Sensor detection)	1. Refrigerant leaks from the piping or the heat exchanger in the indoor unit. 2. The following items are used around the lindoor unit. • Spray (LP gas including Freon, and whose main ingredient is propane and butane) • Aerosol insecticide (including ethanol) • Air spray painting (including dichloromethane) • Charcoal (charcoal fire) • Chemicals (such as ethanol)	• Open the window to ventilate the room. After FAN operation is finished, turn off the breaker. (FAN operation will continue for about 7 hours.) • Check the indoor unit to detect the part where refrigerant leaks. • Repair the part where refrigerant leaks. • Turn on the breaker again. • Replace the refrigerant sensor if the problem is not fixed.

NOTE: Blinking patterns of this mode differ from the ones of TROUBLESHOOTING CHECK TABLE (10-4.).

10-3. INSTRUCTION OF TROUBLESHOOTING

1. Check of the unit

*1 "Test Run operation" means the operation within 30 minutes after the emergency operation switch is pressed.

*2 There is a possibility that diesel explosion may occur due to the air mixed in the refrigerant circuit.
First, ensure that there are no leakage points on the valves, flare connections, etc. that allow the air to flow into the refrigerant circuit, or no blockage points (e.g. clogged or closed valves) in the refrigerant circuit that cause an increase in pressure.
If there is no abnormal point like above and the system operates cooling and heating modes normally, the indoor thermistor might have a problem, resulting in false detection.
Check both the indoor coil thermistor and the room temperature thermistor, and replace faulty thermistor(s), if any.
NOTE: Do not start the operation again without repair to prevent hazards.

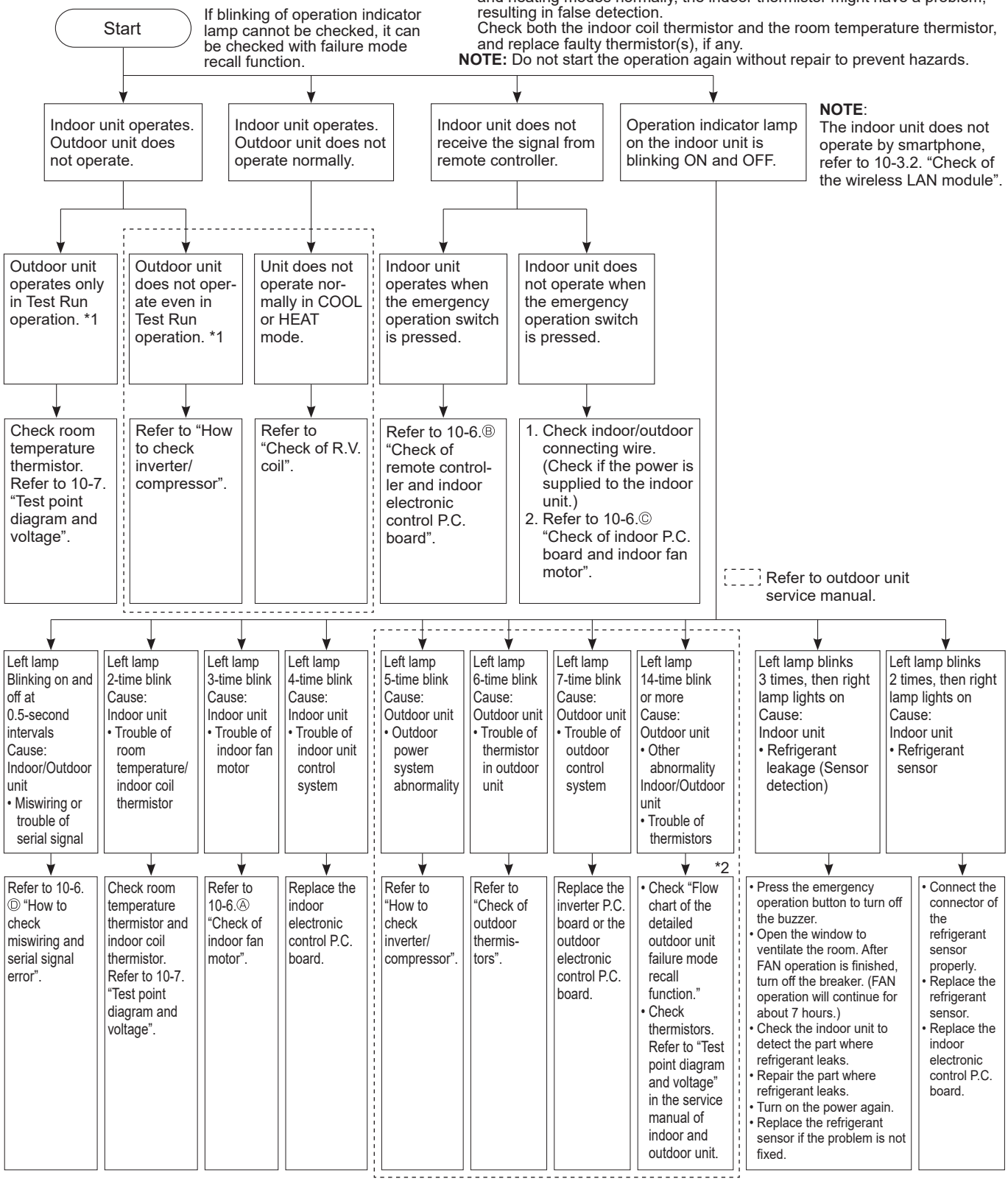

2. Check of the wireless LAN module

Follow the procedure below if the air conditioner cannot be monitored or controlled with a device such as a smartphone.

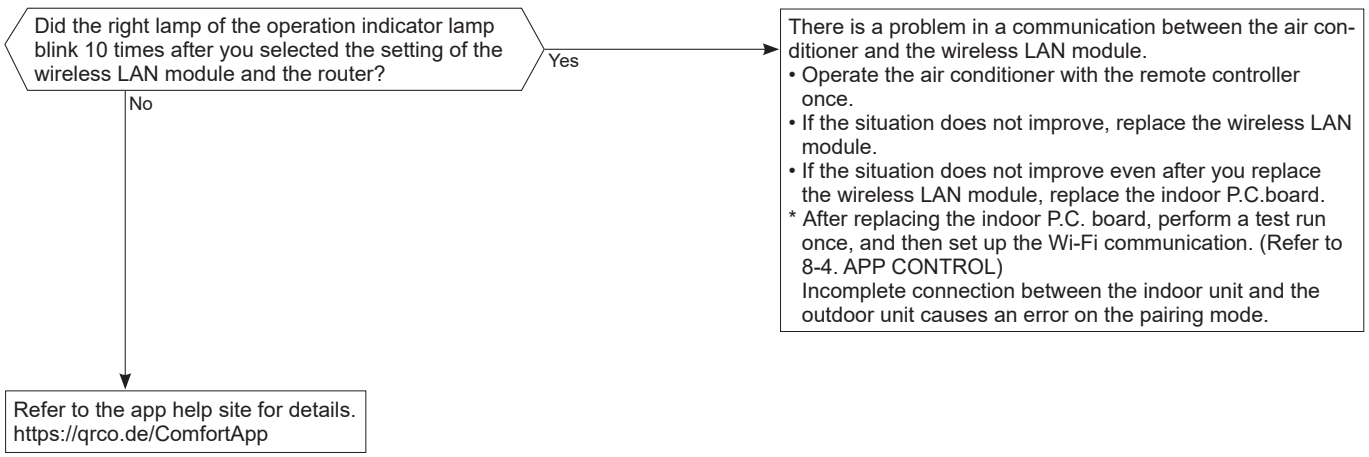

10-4. TROUBLESHOOTING CHECK TABLE

Before taking measures, make sure that the symptom reappears for accurate troubleshooting.
When the indoor unit has started operation and detected an abnormality of the following condition (the first detection after the power on), the indoor fan motor turns off and the operation indicator lamp blinks.

• The following indicator applies regardless of shape of the indication.

Operation indicator

- ● Lit
- ☼ Blinking
- ○ Not lit

No.	Abnormal point	Operation indicator lamp	Symptom	Condition	Remedy
1	Miswiring or serial signal	Left lamp blinks. 0.5-second ON 0.5-second OFF	Indoor unit and outdoor unit do not operate.	The serial signal from the outdoor unit is not received for 6 minutes.	• Refer to 10-6. Ⓓ "How to check miswiring and serial signal error". • Refer to "Check of compressor protector" of outdoor unit service manual.
2	Indoor coil thermistor Room temperature thermistor	Left lamp blinks. 2-time blink 2.5-second OFF		The indoor coil or the room temperature thermistor is short or open circuit.	• Refer to the characteristics of indoor coil thermistor, and the room temperature thermistor (10-7.).
3	Indoor fan motor	Left lamp blinks. 3-time blink 2.5-second OFF		The rotational frequency feedback signal is not emitted during the indoor fan operation.	• Refer to 10-6. Ⓐ "Check of the indoor fan motor".
4	Indoor control system	Left lamp blinks. 4-time blink 2.5-second OFF		It cannot properly read data in the non-volatile memory of the indoor electronic control P.C. board.	• Replace the indoor electronic control P.C. board. • "EE" error may be detected together with "Fb" error for the outdoor unit. When the indoor and outdoor units are connected in the allowed combination, respond only to "Fb" error.
5	Outdoor power system	Left lamp blinks. 5-time blink 2.5-second OFF		It consecutively occurs 3 times that the compressor stops for overcurrent protection or startup failure protection within 1 minute after startup.	• Refer to "How to check of inverter/compressor". Refer to outdoor unit service manual • Check the stop valve.
6	Outdoor thermistors	Left lamp blinks. 6-time blink 2.5-second OFF		The outdoor thermistors short or open circuit during the compressor operation.	• Refer to "Check of outdoor thermistor". Refer to outdoor unit service manual.
7	Outdoor control system	Left lamp blinks. 7-time blink 2.5-second OFF		It cannot properly read data in the non-volatile memory of the inverter P.C. board or the outdoor electronic control P.C. board.	• Replace the inverter P.C. board or the outdoor electronic control P.C. board. Refer to outdoor unit service manual.
8	Indoor electronic control P.C. board	Left lamp blinks 9-time blink 2.5-second OFF		CN1S1 is open over 3 minutes.	• Check CN1S1.
9	Other abnormality *1	Left lamp blinks. 14-time blink or more 2.5-second OFF		An abnormality other than the above is detected. An abnormality of the indoor thermistors, the defrost thermistor or ambient temperature thermistor is detected.	• Check the stop valve. • Check the 4-way valve. • Check the abnormality in detail using the failure mode recall function for outdoor unit. • Refer to TEST POINT DIAGRAM AND VOLTAGE" on the service manual of indoor and outdoor unit for the characteristics of the thermistors. (Do not start the operation again without repair to prevent hazards.)
10	Outdoor control system	Left lamp lights up.	Outdoor unit does not operate.	It cannot properly read data in the non-volatile memory of the inverter P.C. board or the outdoor electronic control P.C. board.	• Check the blinking pattern of the LED on the inverter P.C. board or the outdoor electronic control P.C. board.

*1 Refer to *2 on 10-3. INSTRUCTION OF TROUBLESHOOTING.

No.	Abnormal point	Operation indicator lamp	Symptom	Condition	Remedy
11	Refrigerant sensor	Left lamp blinks 2 times, then Right lamp lights on. Left lamp 3.0-second OFF Right lamp 3.0-second ON	• FAN operation starts, and swing the horizontal vane and vertical vane. • It cannot be controlled by the remote controller.	The refrigerant sensor mounted on the indoor unit does not work. The refrigerant sensor is not connected properly or the wire is broken.	• Connect the connector of the refrigerant sensor properly. • Replace the refrigerant sensor.
12	Refrigerant leakage (Sensor detection)	Left lamp blinks 3 times, then Right lamp lights on. Left lamp 3.0-second OFF Right lamp 3.0-second ON	• The buzzer sounds. • FAN operation starts, and swing the horizontal vane and vertical vane. • It cannot be controlled by the remote controller.	1. Refrigerant leaks from the piping or the heat exchanger in the indoor unit. 2. The following items are used around the Iindoor unit. • Spray (LP gas including Freon, and whose main ingredient is propane and butane) • Aerosol insecticide (including ethanol) • Air spray painting (including dichloromethane) • Charcoal (charcoal fire) • Chemicals (such as ethanol)	• Press and hold the emergency operation button to turn off the buzzer. • Open the window to ventilate the room. After FAN operation is finished, turn off the breaker. (FAN operation will continue for about 7 hours.) • Check the indoor unit to detect the part where refrigerant leaks. • Repair the part where refrigerant leaks. • Turn on the power again. • Replace the refrigerant sensor if the problem is not fixed.

OPERATION INDICATOR

No.	Abnormal point	Operation indicator lamp	Symptom	Condition	Remedy
1	**MXZ type** Operation mode setting	Left lamp lights and lower lamp blinks. 2.5-second OFF	Outdoor unit operates but indoor unit does not operate.	The operation mode of the each indoor unit is differently set to COOL (includes DRY) and HEAT at the same time, the operation mode of the indoor unit that has operated at first has the priority.	• Unify the operation mode. Refer to outdoor unit service manual.

10-5. TROUBLESHOOTING CRITERION OF MAIN PARTS

MSZ-EX09NL2W MSZ-EX12NL2W MSZ-EX15NL2W MSZ-EX18NL2W
MSZ-EX09NL2B MSZ-EX12NL2B MSZ-EX15NL2B MSZ-EX18NL2B
MSZ-EX09NL2S MSZ-EX12NL2S MSZ-EX15NL2S MSZ-EX18NL2S

Part name	Check method and criterion	Figure
Room temperature thermistor (RT11) Indoor coil thermistor (RT12, RT13)	Measure the resistance with a multimeter. Refer to 10-7. "Test point diagram and voltage", "Indoor electronic control P.C. board", for the chart of thermistor.	
Indoor fan motor (MF)	Check 10-6.Ⓐ "Check of indoor fan motor".	
Vane motor (MV)	Measure the resistance between the terminals with a multimeter. (Temperature: 50 - 86°F (10 - 30°C)) Color of the lead wire: RED - YLW Normal: 219 - 273 Ω	YLW YLW RED YLW YLW

10-6. TROUBLESHOOTING FLOW

Ⓐ Check of indoor fan motor

The indoor fan motor error has occurred, and the indoor fan does not operate.

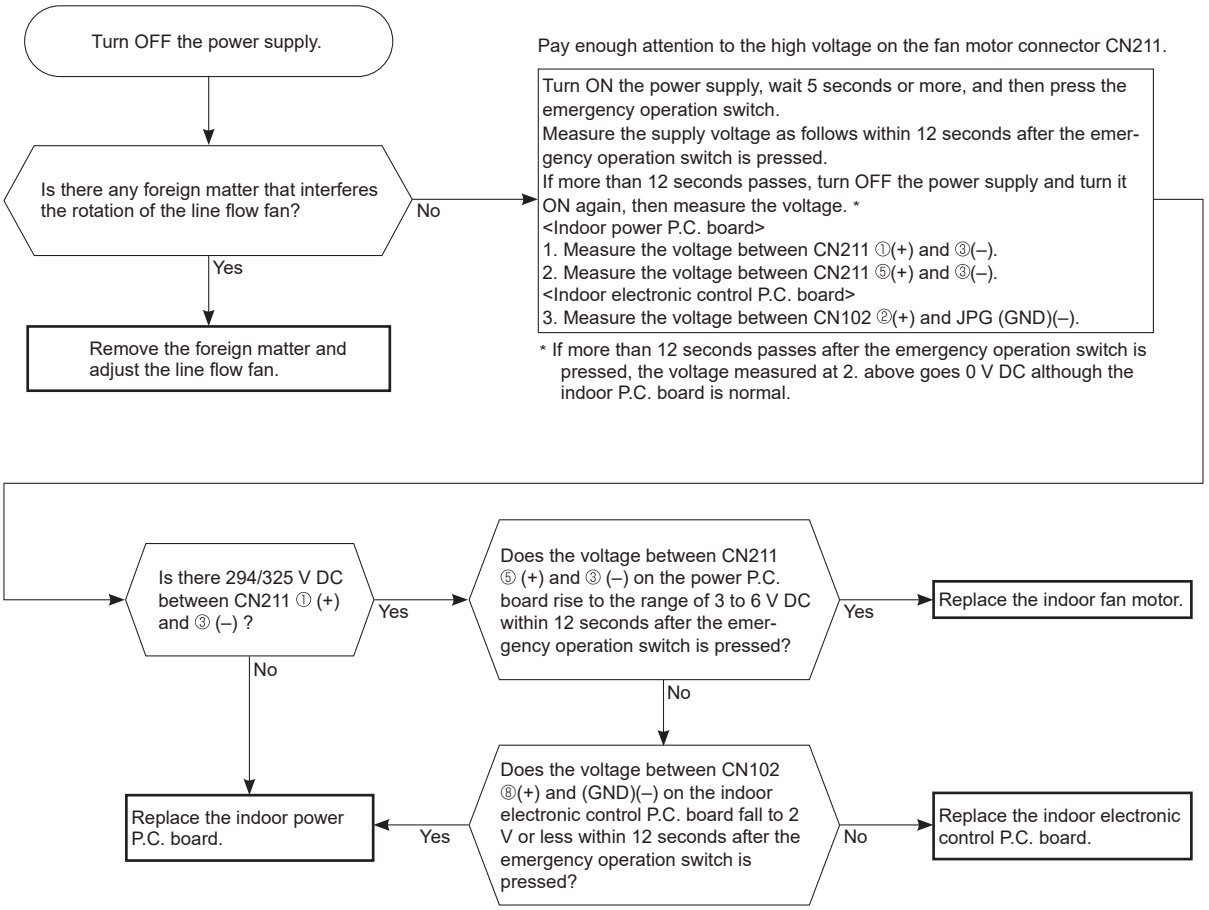

The indoor fan motor error has occurred, and the indoor fan repeats "12-second ON and 30-second OFF" 3 times, and then stops.

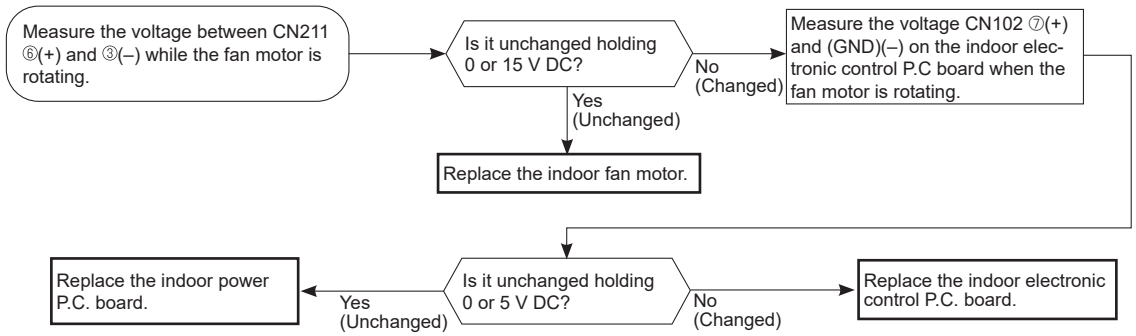

Ⓑ Check of remote controller and indoor electronic control P.C. board

*Check if the remote controller is exclusive for this air conditioner.

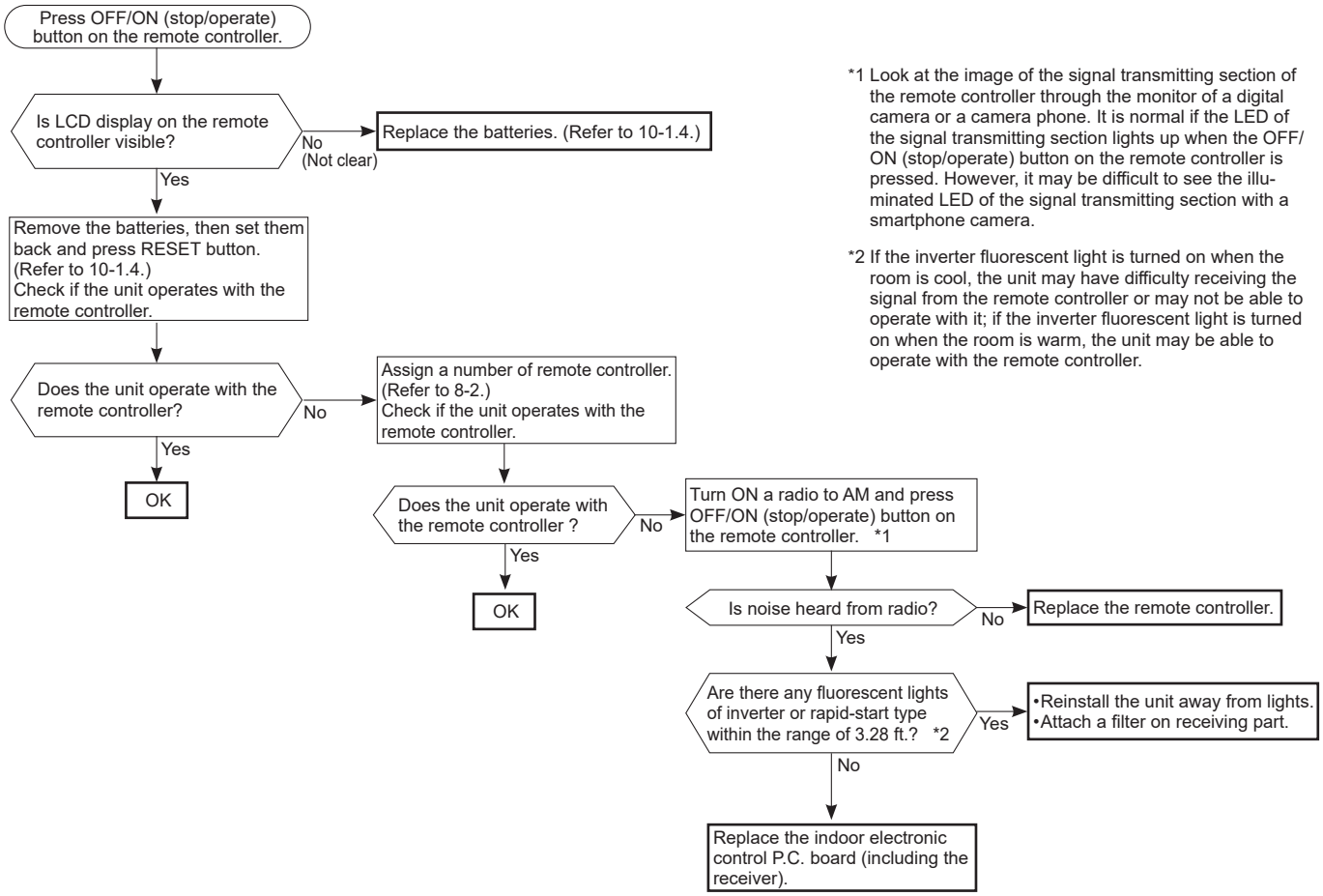

*1 Look at the image of the signal transmitting section of the remote controller through the monitor of a digital camera or a camera phone. It is normal if the LED of the signal transmitting section lights up when the OFF/ON (stop/operate) button on the remote controller is pressed. However, it may be difficult to see the illuminated LED of the signal transmitting section with a smartphone camera.

*2 If the inverter fluorescent light is turned on when the room is cool, the unit may have difficulty receiving the signal from the remote controller or may not be able to operate with it; if the inverter fluorescent light is turned on when the room is warm, the unit may be able to operate with the remote controller.

Ⓒ Check of indoor P.C. board and indoor fan motor

Turn OFF the power supply.
Remove indoor fan motor connector CN211 from indoor power P.C. board and vane motor connector CN151 from the indoor electronic control P.C. board and turn ON the power supply.

Does the unit operate with the remote controller?
Does OPERATION INDICATOR lamp light up by pressing the emergency operation switch?

Yes → Measure the resistance between CN211 ③ and ④ of the indoor fan motor connector. → Short circuit: Replace the indoor fan motor.

Yes → Measure the resistance of the vane motor coil. Refer to 10-5. → Short circuit: Replace the vane motor and the indoor electronic control P.C. board.

No → Turn OFF the power supply. Check both "parts side" and "pattern side" of the indoor power P.C. board visually.

Are the varistor (NR11) burnt and the fuse (F11) blown?
Yes → Replace the varistor (NR11) and fuse (F11). *3
No

Be sure to check both the fuse and the varistor in any case.

Is the fuse (F11) blown only?
No
Yes → Measure the resistance between CN211 ①(+) and ③(-) of indoor fan motor connector. *1, *2

Is the resistance 1MΩ or more?
No → Replace the fuse (F11) and the indoor fan motor. *3
Yes → Replace the fuse (F11). *3

*1. The fan motor connector's ① lead wire is red, whereas ③ is black.
*2. Connect "+" of the multimeter to fan motor connector's ① lead wire, and "-" to ③ lead wire, otherwise the resistance cannot be measured properly.
*3. Please replace the fuse after removing the indoor power P.C. board from the electrical box.

Measure the resistance of resistor (R111) on the indoor power P.C. board.

Is the resistance of resistor (R111) approximately 3.9 Ω ?
No → Replace the indoor power P.C. board and the indoor fan motor.
Yes

Is there approximately 5 V DC between 5 V (+) and CN102 ⑥(-) of the indoor electronic control P.C. board?

Is there approximately 9 V to 13 V DC between 12 V (+) and CN102 ②(-) of the indoor electronic control P.C. board?
Yes → Replace the indoor fan motor.
No

Is connector CN102 on the indoor electronic control P.C. board or lead wires disconnected?
Yes → Connect the connector or repair disconnection.
No → Replace the indoor electronic control P.C. board.

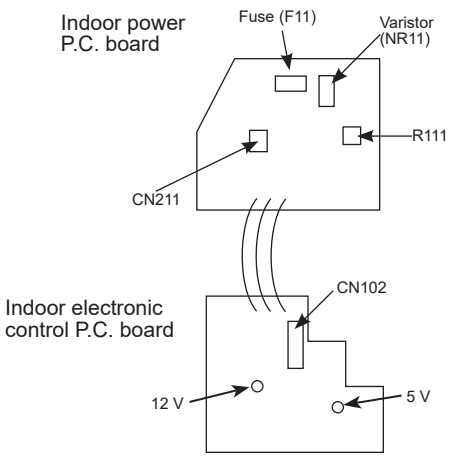

Ⓓ How to check miswiring and serial signal error

NOTE: Refer to the outdoor unit service manual.

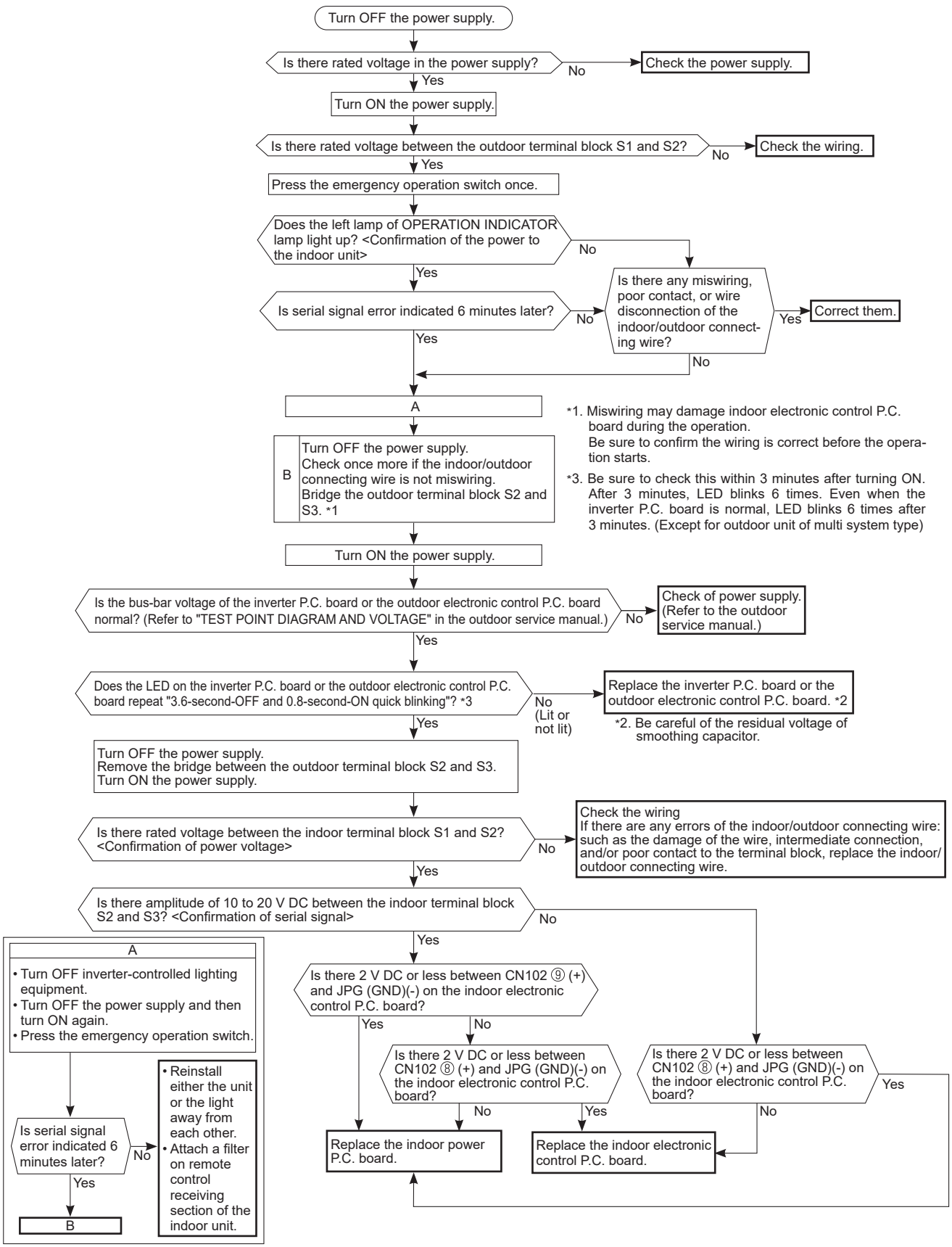

*1. Miswiring may damage indoor electronic control P.C. board during the operation.
Be sure to confirm the wiring is correct before the operation starts.

*3. Be sure to check this within 3 minutes after turning ON. After 3 minutes, LED blinks 6 times. Even when the inverter P.C. board is normal, LED blinks 6 times after 3 minutes. (Except for outdoor unit of multi system type)

*2. Be careful of the residual voltage of smoothing capacitor.

Ⓔ Electromagnetic noise enters into TV sets or radios

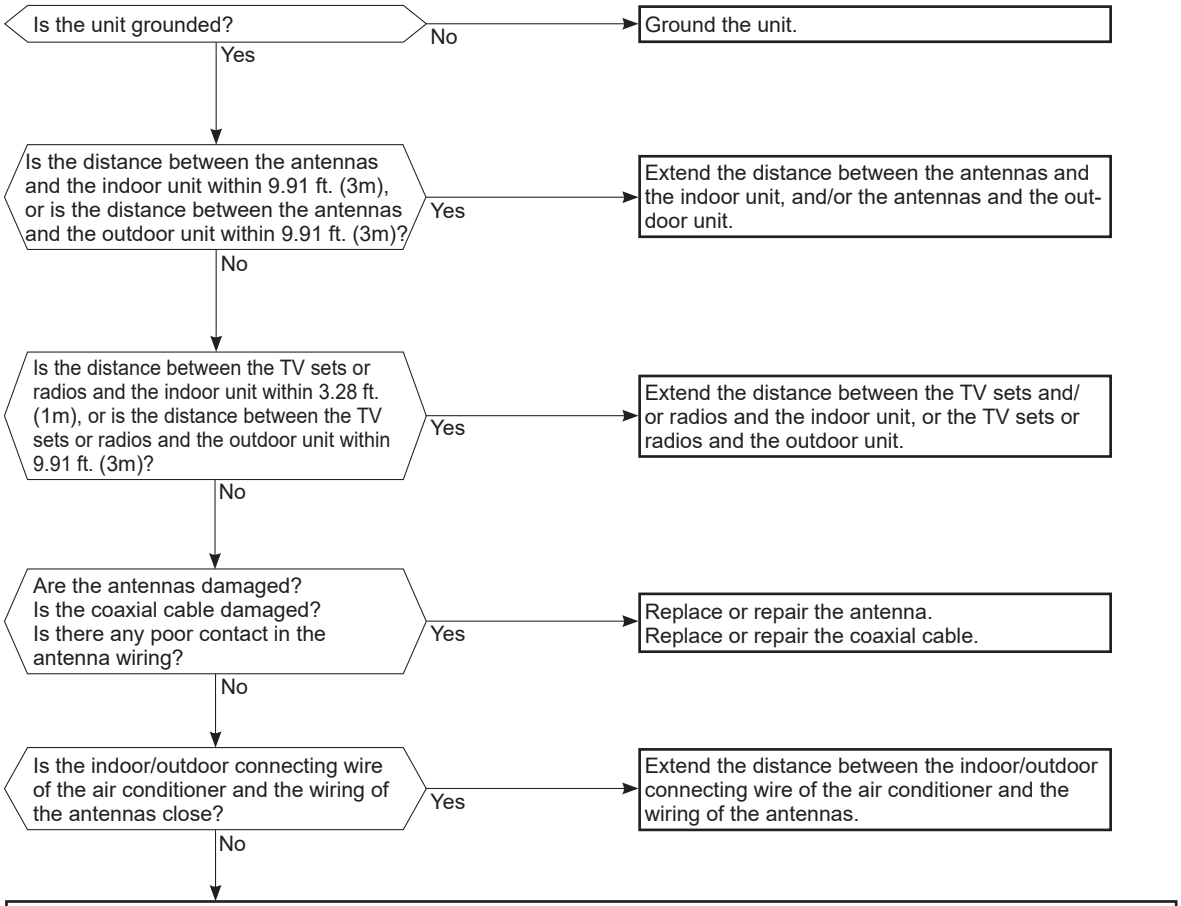

Even if all of the above conditions are fulfilled, the electromagnetic noise may enter, depending on the electric field strength or the installation condition (combination of specific conditions such as antennas or wiring).
Check the following before asking for service.

1. Devices affected by the electromagnetic noise
   TV sets, radios (FM/AM broadcast, shortwave)
2. Channel, frequency, broadcast station affected by the electromagnetic noise
3. Channel, frequency, broadcast station unaffected by the electromagnetic noise
4. Layout of:
   indoor/outdoor unit of the air conditioner, indoor/outdoor wiring, ground wire, antennas, wiring from antennas, receiver
5. Electric field intensity of the broadcast station affected by the electromagnetic noise
6. Presence or absence of amplifier such as booster
7. Operation condition of air conditioner when the electromagnetic noise enters in
   1) Turn OFF the power supply once, and then turn ON the power supply. In this situation, check for the electromagnetic noise.
   2) Within 3 minutes after turning ON the power supply, press OFF/ON (stop/operate) button on the remote controller for power ON, and check for the electromagnetic noise.
   3) After a short time (3 minutes later after turning ON), the outdoor unit starts running. During operation, check for the electromagnetic noise.
   4) Press OFF/ON (stop/operate) button on the remote controller for power OFF, when the outdoor unit stops but the indoor/outdoor communication still runs on. In this situation, check for the electromagnetic noise.

10-7. TEST POINT DIAGRAM AND VOLTAGE

MSZ-EX09NL2W MSZ-EX12NL2W MSZ-EX15NL2W MSZ-EX18NL2W
MSZ-EX09NL2B MSZ-EX12NL2B MSZ-EX15NL2B MSZ-EX18NL2B
MSZ-EX09NL2S MSZ-EX12NL2S MSZ-EX15NL2S MSZ-EX18NL2S

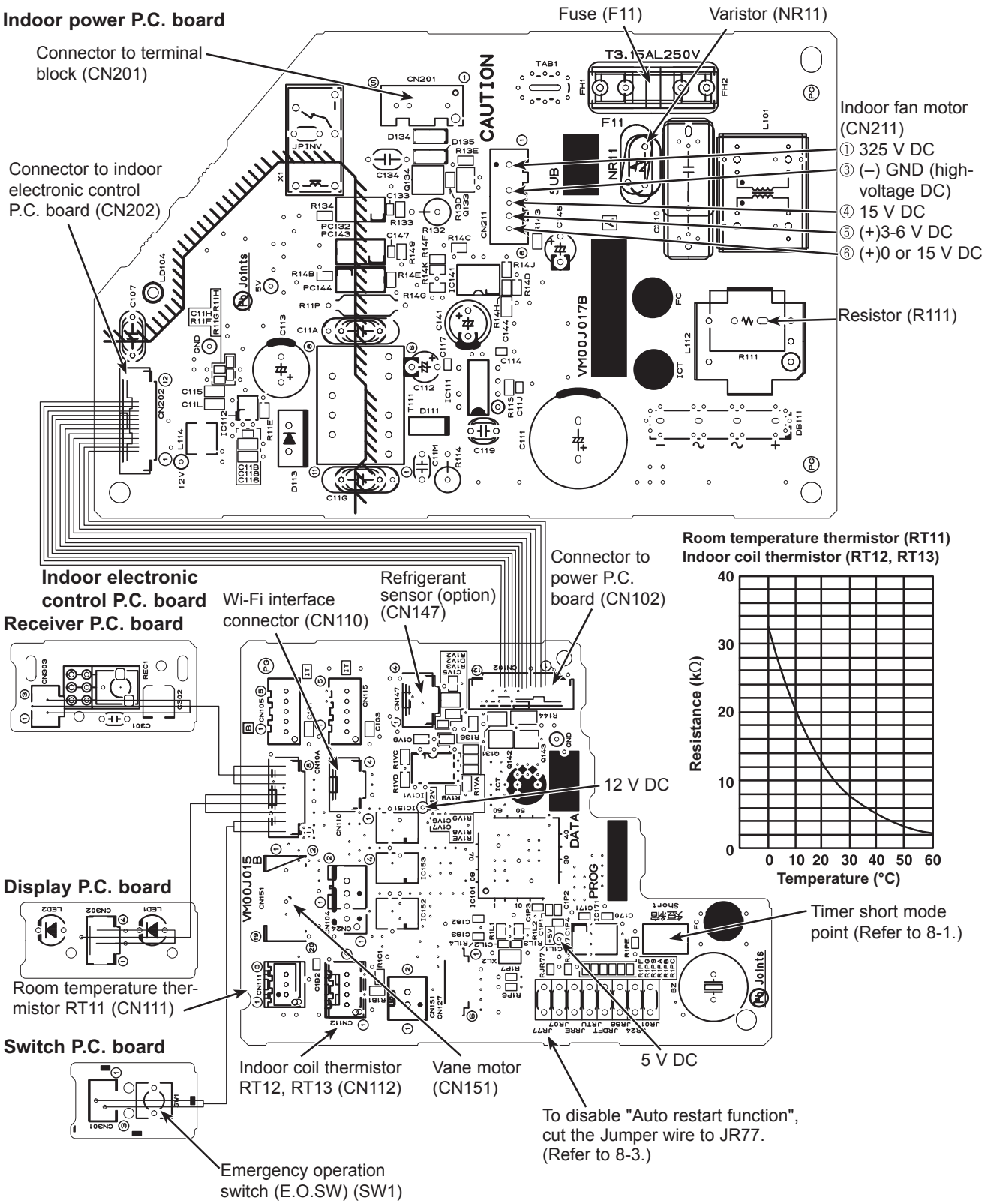

11 DISASSEMBLY INSTRUCTIONS

<Dataching method of the terminal with locking mechanism>

The terminal which has the locking mechanism can be detached as shown below.
There are 2 types of terminal with locking mechanism.
The terminal without locking mechanism can be detached by pulling it out.
Check the shape of the terminal before detaching.

(1) Slide the sleeve and check if there is a locking lever or not.

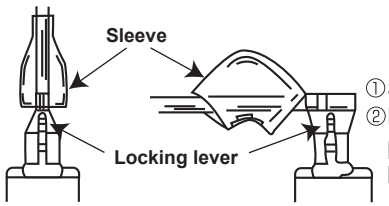

①Slide the sleeve.
②Pull the terminal while pushing the locking lever.

(2) The terminal with this connector shown below has the locking mechanism.

①Hold the sleeve, and pull out the terminal slowly.

11-1. MSZ-EX09NL2W MSZ-EX12NL2W MSZ-EX15NL2W MSZ-EX18NL2W
MSZ-EX09NL2B MSZ-EX12NL2B MSZ-EX15NL2B MSZ-EX18NL2B
MSZ-EX09NL2S MSZ-EX12NL2S MSZ-EX15NL2S MSZ-EX18NL2S

→: Indicates the visible parts in the photos/figures.
--→: Indicates the invisible parts in the photos/figures.

NOTE: Turn OFF power supply before disassembly.

OPERATING PROCEDURE	PHOTOS/FIGURES
1. Removing the panel (1) Remove the horizontal vanes. (2) Remove the screw caps of the panel. Remove the screws of the panel. (3) Unhook the lower part (Ⓐ) of the panel. (4) First, hold the lower part of the right end of the panel, and hold the lower part of the left end of the panel. (5) Pull the panel slightly toward you, and then remove the panel by pushing it upward.	**Photo 1** Photo: **MSZ-EX•NL2B** 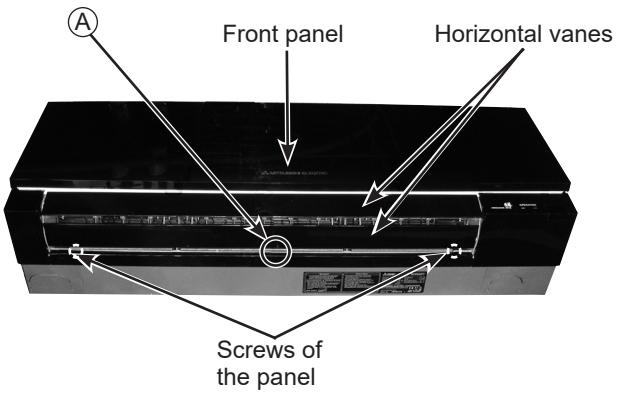

PROCEDURE	PHOTOS/FIGURES
2. Removing the wireless LAN module (1) Remove the panel (Refer to section 1) and the right corner box. (2) Remove the screw of the V.A. clamp and remove the V.A. clamp. (3) Disconnect the indoor/outdoor connecting wire from the terminal block. (4) Remove the screw of the electrical cover, and remove the electrical cover. (5) Disconnect the following connector : <Indoor electronic control P.C. board> CN110 (Wireless LAN module) (6) Disengage the catch and remove the wireless LAN module. **How to install the wireless LAN module** (1) Attach the wireless LAN module. (2) Hook the cable of wireless LAN module to the water cover. (3) Connect the connector of CN110 (Wireless LAN module) to the indoor electronic control P.C. board. (4) Install the electrical cover, and install the screw in the electrical cover. (5) Connect the indoor/outdoor connecting wire to the terminal block. (6) Install the V.A. clamp, and install the screw in the V.A. clamp.	**Photo 2** 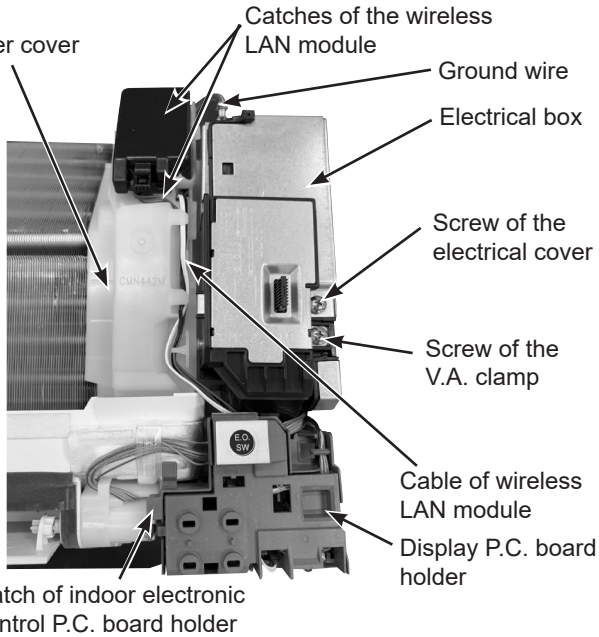 **Photo 3**
3. Remove the indoor electrical box (1) Remove the panel (Refer to section 1.) and the corner box right. (2) Remove the screw of the V.A. clamp. Remove the V.A. clamp and the indoor/outdoor connecting wire (Refer to section 2.). (3) Remove the ground wire connected to the indoor heat exchanger from the electrical box. (4) Remove the screw of the electrical cover and remove the electrical cover. (5) Disconnect following connectors: <Indoor electronic control P.C. board> CN110 (Wireless LAN module) CN151 (Vane motor) <Indoor power P.C. board> CN211 (Indoor fan motor) (6) Remove the screw of the conduit cover and the conduit cover. (Photo 4) (7) Remove the screw of the conduit plate and the conduit plate. (Photo 5) (8) Remove the screw fixing the electrical box, then the upper catch of the electrical box, and pull out the electrical box.	**Photo 4** 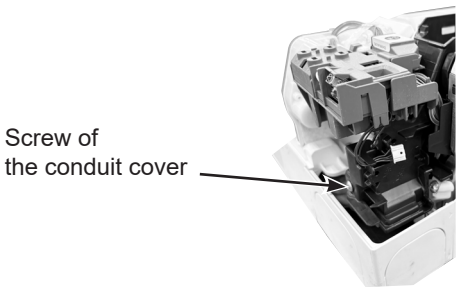 **Photo 5** 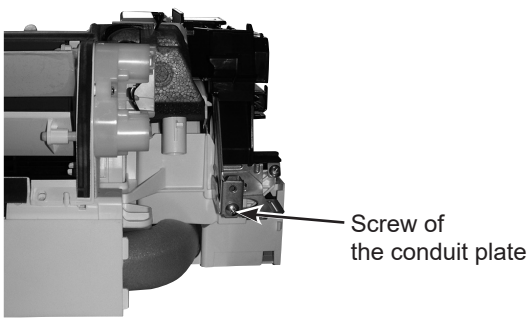

OPERATING PROCEDURE	PHOTOS/FIGURES
4. Removing the indoor power P.C. board, the switch board, the display board, the receiver board and the indoor electronic control P.C. board (1) Remove the indoor electrical box (Refer to section 3.). (2) Remove the ground wire connected to the electrical box from the indoor power P.C. board. (3) Disconnect the following connectors: <Indoor electronic power P.C. board> CN201 (Terminal block) CN202 (To the indoor electronic control P.C. board) (4) Remove the indoor power P.C. board. (5) Disconnect the following connectors: <Indoor electronic control P.C. board> CN111 (Room temperature thermistor) CN112 (Indoor coil thermistor) CN147 (Refrigerant sensor (option)) (6) Unhook the catches of the display P.C. board holder from the nozzle and the electrical box (right side). (7) Open the rear cover of the display P.C. board holder and remove the switch board, the display board and the receiver board. Remove the indoor electronic control P.C. board. **How to install the refrigerant sensor (option) (Photo 7)** (1) Connect the cable to the refrigerant sensor connector. (2) Put in the refrigerant sensor to the refrigerant sensor space.	**Photo 6** 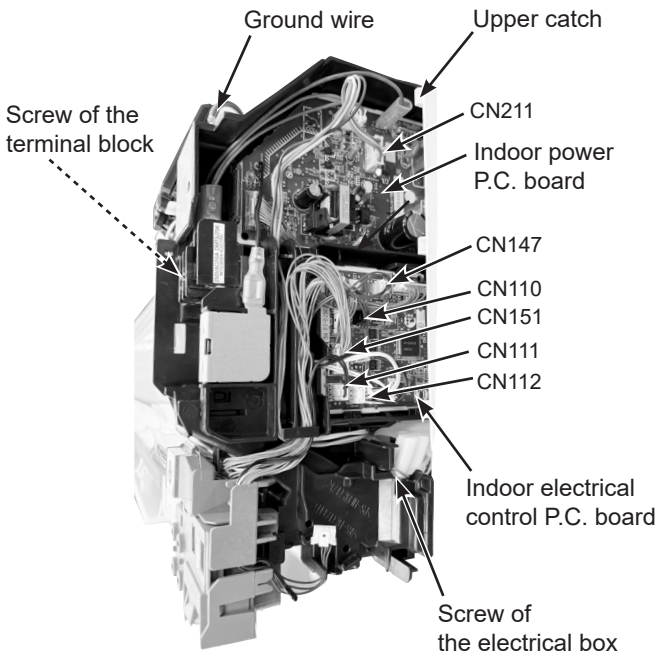 **Photo 7** 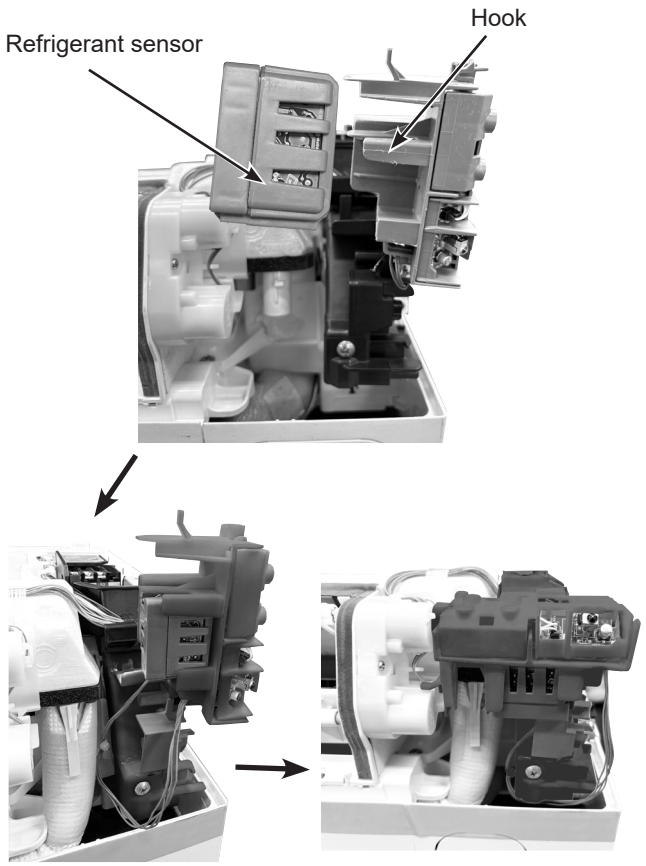

OPERATING PROCEDURE	PHOTOS/FIGURES
5. Removing the nozzle assembly (1) Remove the panel (Refer to section 1.) and the corner box right. (2) Remove the indoor/outdoor connecting wire. (3) Remove the electrical cover (Refer to section 3.). (4) Disconnect the following connector: <Indoor electronic control P.C. board> CN151 (Vane motor) (5) Remove the display P.C. board holder. (6) Pull out the drain hose from the nozzle assembly and remove the nozzle assembly.	**Photo 8** 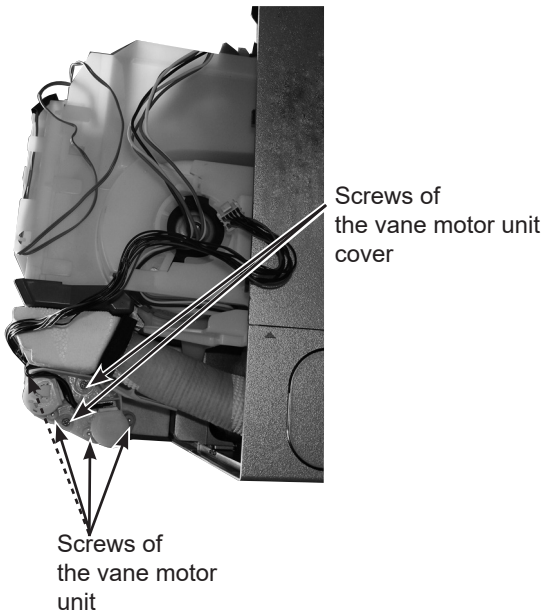
6. Removing the horizontal vane motor (1) Remove the nozzle assembly (Refer to section 5.). (2) Remove the screws of the vane motor unit cover, and pull out the vane motor unit (3) Remove the screws of the vane motor unit. (4) Disconnect the connector from the vane motor. (5) Remove the vane motor from the vane motor unit.	

OPERATING PROCEDURE	PHOTOS/FIGURES

7. Removing the indoor fan motor, the indoor coil thermistor and the line flow fan

(1) Remove the panel (Refer to section 1.) and the corner box right.
(2) Remove the indoor electronic control P.C. board holder, the electrical box and the nozzle assembly.
(3) Remove the screws fixing the motor bed.
(4) Release the hooks of the water cut and remove the water cut.
(5) Loosen the screw fixing the line flow fan.
(6) Remove the motor bed together with the indoor fan motor and the motor band.
(7) Release the hooks of the motor band and remove the motor band. Pull out the indoor fan motor.
(8) Remove the indoor coil thermistor from the heat exchanger.
* Install the indoor coil thermistor in its former position when assembling it (Photo 9.).
(9) Remove the screws fixing the left side and the upper right side of the heat exchanger (Photo 11, Photo 12).
(10) Lift the heat exchanger, and pull out the line flow fan to the lower-left.

* When attaching the line flow fan, screw the line flow fan so 4 mm gap is provided between the right end of the line flow fan and the right wall of the air passage of the box (Figure 1).

Figure 1

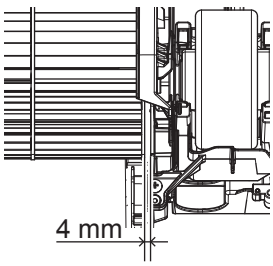

Photo 12

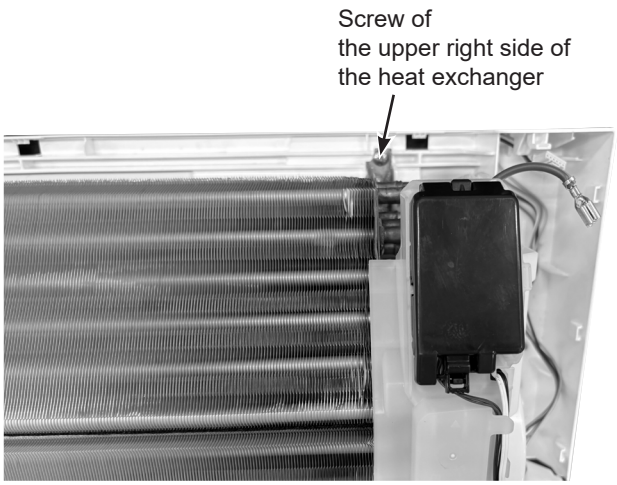

Photo 9

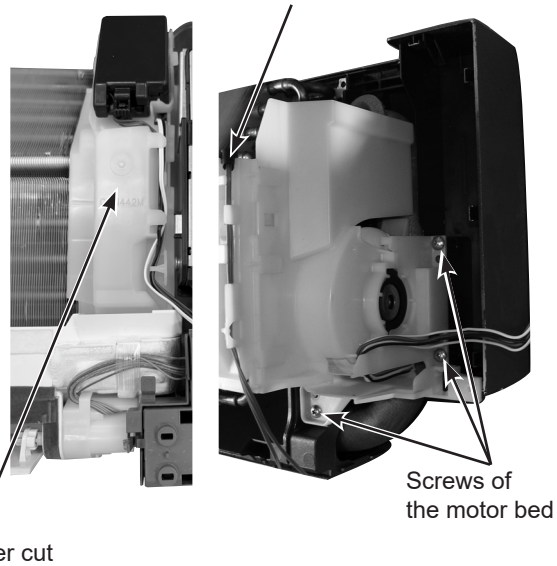

Photo 10

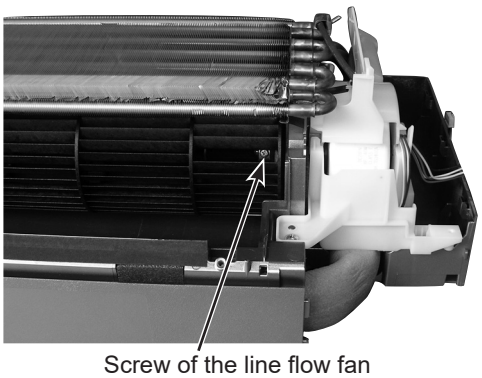

Photo 11

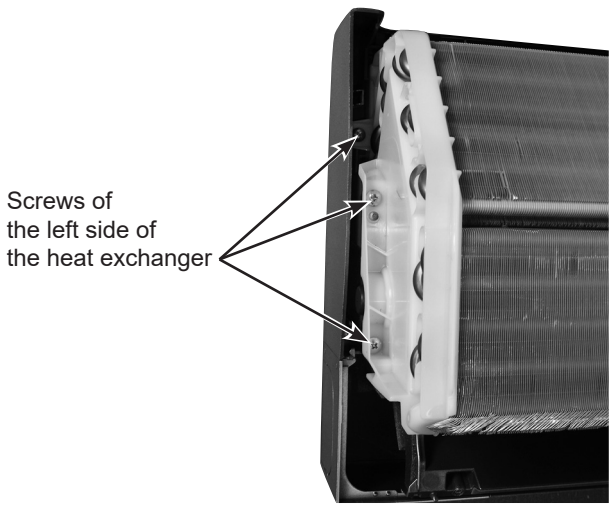

Fixing the indoor coil thermistor

*There are 2 forms of parts for fixing the indoor coil thermistor.

Clip shape

Holder shape

When fixing the indoor coil thermistor to the clip-shape/holder-shape part, the lead wire should point down.

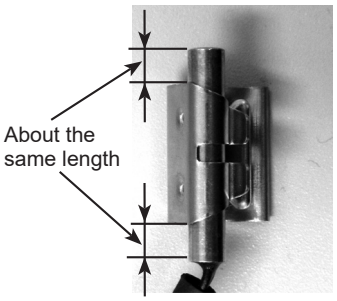

Position and procedure for mounting the clip-shape part

1. Set the indoor coil thermistor in the center of the clip-shape part.

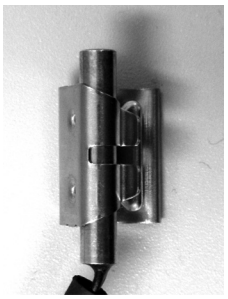

2. Check the (marked) mounting position.

3. Mount the clip-shape part.

NOTE:

- Take care to avoid loss and accidental falling of the clip-shape part inside the unit.
- Mount the clip-shape part on the marked position.
- Do not pull the lead wire when removing the indoor coil thermistor.

MITSUBISHI ELECTRIC CORPORATION

HEAD OFFICE: TOKYO BUILDING, 2-7-3, MARUNOUCHI, CHIYODA-KU, TOKYO 100-8310, JAPAN

MITSUBISHI ELECTRIC CONSUMER PRODUCTS (THAILAND) CO., LTD.
700/406 MOO 7, TAMBON DON HUA ROH,
AMPHUR MUANG, CHONBURI 20000 THAILAND
Published: May. 2026. No. TBH266
Made in Thailand

Specifications are subject to change without notice.