MSZ-EX18NLW & SUZ-AA18NL
16,400 BTU/H WALL-MOUNTED INDOOR UNIT
18,000 BTU/H HEAT PUMP OUTDOOR UNIT

Job Name:			
System Reference:		**Date:**	

INDOOR Unit ... MSZ-EX18NLW

OUTDOOR Unit ... SUZ-AA18NL

INDOOR UNIT FEATURES

- Econo Cool: Econo Cool is feature that temporarily adjusts the airflow to maintain comfort while using less energy.
- Swing Mode: An indoor unit with this capability can move air throughout the room like an oscillating fan.
- Smart Set: Smart Set conveniently adjusts to the preferred preset temperature by pressing a single button on the remote control.
- Dual Barrier Coating: Dual Barrier Coating reduces the collection of contaminants like dust, fibers, smoke, and oil on the inner surface of the indoor unit.
- Quiet: Outdoor units are as quiet as a typical conversation, and most indoor units are whisper quiet.
- Electrostatic Enzyme Filter (Built-In): Charged with static electricity, the Electrostatic filter is designed to attract and filter charged particles which can include airborne non-living particulates.

OUTDOOR UNIT FEATURES

- Inverter Driven Compressor: Inverter technology uses only the precise amount of energy needed to keep a space comfortable.
- Blue Fin Coating: Anti-corrosion coating that protects the outdoor heat exchanger against salt, sulfur, and other airborne contaminants that impact the efficiency and performance of the outdoor units.
- Seacoast Protection: An anti-corrosion treatment applied to the aluminum fins of the heat exchanger of the outdoor unit to protect against corrosion caused by salt, sulfur, and other airborne contaminants, especially in coastal and industrial areas.

© 2026 Mitsubishi Electric Trane HVAC US LLC. All rights reserved.

SPECIFICATIONS: MSZ-EX18NLW & SUZ-AA18NL

Cooling at 95F[1]	Maximum Capacity	Btu/h	16400
	Rated Capacity	Btu/h	16400
	Minimum Capacity	Btu/h	5300
	Maximum Power Input	W	1390
	Rated Power Input	W	1390
	Moisture Removal	Pints/h	4.50
	Sensible Heat Factor		0.69
	Power Factor [208V / 230V]	%	95 / 95
Heating at 47F[2]	Maximum Capacity	Btu/h	21700
	Rated Capacity	Btu/h	20000
	Minimum Capacity	Btu/h	8400
	Maximum Power Input	W	1960
	Rated Power Input	W	1700
	Power Factor [208V / 230V]	%	92 / 92
Heating at 17F[3]	Maximum Capacity	Btu/h	13100
	Rated Capacity	Btu/h	13100
	Maximum Power Input	W	1340
	Rated Power Input	W	1340
Heating at 5F[5]	Maximum Capacity	Btu/h	10600
	Maximum Power Input	W	1035
Heating at -4F[6]	Maximum Capacity	Btu/h	8600
Efficiency	SEER2		17.50
	EER2[1]		11.70
	HSPF2 [IV]		10.60
	COP at 47°F[2]		3.40
	COP at 17°F at Maximum Capacity[3]		2.80
	COP at 5°F at Maximum Capacity[5]		3.00
	COP at -4°F at Maximum Capacity[6]		2.49
	ENERGY STAR® Certified		Yes
Electrical	Voltage, Phase, Frequency	V AC / V AC , ø , Hz	208 / 230 , 1 , 60
	Guaranteed Voltage Range	V AC	198 - 253
	Voltage: Indoor - Outdoor, S1-S2	V AC	208/230
	Voltage: Indoor - Outdoor, S2-S3	V DC	12-24
	Short-circuit Current Rating [SCCR]	kA	5
	Recommended Fuse/Breaker Size (Outdoor)	A	30
	Recommended Wire Size [Indoor - Outdoor]	AWG	14
Indoor Unit	Fan Motor Output	W	30
	Fan Motor Type		DC Motor
	Airflow Rate at Cooling, Dry	CFM	208 , 248 , 288 , 343 , 408
	Airflow Rate at Cooling, Wet	CFM	188 , 223 , 259 , 309 , 367
	Airflow Rate at Heating, Dry	CFM	232 , 264 , 313 , 347 , 497
	Sound Pressure Level [Cooling]	dB (A)	30 , 33 , 36 , 40 , 43
	Sound Pressure Level [Heating]	dB (A)	30 , 33 , 37 , 43 , 49
	Drain Pipe Size O.D.	inch [mm]	5/8 [16]
	Condensate Lift Mechanism, Max Height	inch	0
	Dual Barrier Coating on Heat Exchanger		Yes
	Dual Barrier Coating on Fan		Yes
	External Finish Color		0.7PB 9.2/0.4
	Unit Dimensions (W x D x H)	inch x inch x inch [mm x mm x mm]	34-13/16 x 7-11/16 x 11-3/4 [885 x 195 x 299]
	Package Dimensions (W x D x H)	inch x inch x inch [mm x mm x mm]	35-5/8 x 14-3/16 x 10-11/16 [980 x 360 x 270]
	Unit Weight	lbs [kg]	26 [11.50]
	Package Weight	lbs [kg]	29 [13]
IDU Operating Temp. Range	Cooling Intake Air Temp [Maximum / Minimum]	°FDB , °FWB / °FDB , °FWB	90 , 73 / 66 , 59
	Heating Intake Air Temp [Maximum / Minimum]	°FDB	83 / 50
Outdoor Unit	MCA	A	25

Notes

[1]Cooling at 95°F (Indoor // Outdoor) °F 80 DB, 67 WB // 95 DB, 75 WB
[2]Heating at 47°F (Indoor // Outdoor) °F 70 DB, 60 WB // 47 DB, 43 WB
[3]Heating at 17°F (Indoor // Outdoor) °F 70 DB, 60 WB // 17 DB, 15 WB
[5]Heating at 5°F (Indoor // Outdoor) °F 70 DB, 60 WB // 5 DB, 4 WB
[*]Indoor/Outdoor Unit Operating Temperature Range (Cooling Air Temp [Maximum / Minimum]): • Applications should be restricted to comfort cooling only; equipment cooling applications are not recommended for low ambient temperature conditions.
[**]Outdoor Unit Operating Temperature Range (Cooling Thermal Lock-out / Re-start Temperatures; Heating Thermal Lock-out / Re-start Temperatures): • System cuts out in heating mode and automatically restarts at these temperatures.
[6]Heating at -4°F (Indoor // Outdoor) °F 70 DB, 60 WB // -4 DB, -5 WB

© 2026 Mitsubishi Electric Trane HVAC US LLC. All rights reserved.

Outdoor Unit	MOCP	A	42
	Fan Motor Output	W	50
	Airflow Rate Cooling	CFM	2193
	Airflow Rate Heating	CFM	1949
	Defrost Method		Reverse Cycle
	Coating on Heat Exchanger (Bluefin, Sea Coast)		Yes , Yes
	Sound Pressure Level, Cooling[1]	dB (A)	54
	Sound Pressure Level, Heating[2]	dB (A)	55
	Compressor Type		Twin Rotary
	Compressor Model		SRB172FQHMT
	Compressor Oil [Type // Charge]	// oz	RM68EH // 14.54
	External Finish Color		Munsell No.3Y 7.8/1.1
	Base Pan Heater		Optional
	Unit Dimensions (W x D x H)	inch x inch x inch [mm x mm x mm]	33-1/16 x 13 x 34-5/8 [840 x 330 x 880]
	Package Dimensions (W x D x H)	inch x inch x inch [mm x mm x mm]	38-5/8 x 16-9/16 x 39 [980 x 420 x 990]
	Unit Weight	lbs [kg]	115 [52.16]
	Package Weight	lbs [kg]	133 [60.33]
ODU Operating Temp. Range	Cooling Intake Air Temp [Maximum / Minimum*]	°FDB	115 / 14
	Cooling Thermal Lock-out / Re-start Temperatures**	°FDB	-1 / 3
	Heating Intake Air Temp [Maximum / Minimum]	°FDB , °FWB / °FDB , °FWB	75 , 65 / -4 , -5
	Heating Thermal Lock-out / Re-start Temperatures**	°FDB	-14 / -4
Refrigerant	Type		R454B
	Pre-Charged Refrigerant Amount	lbs , oz	3 ,
	Maximum Pre-Charged Piping Length	ft [m]	25 [7.60]
	Additional Refrigerant Charge Per Additional Piping Length	oz/ft	0.22
Piping	Liquid Pipe Size O.D. [Flared]	inch [mm]	1/4 [6.35]
	Gas Pipe Size O.D. [Flared]	inch [mm]	1/2 [12.72]
	Maximum Piping Length	ft [m]	100 [30]
	Maximum Height Difference	ft [m]	50 [15]
	Maximum Number of Bends		10

Notes

[1]Cooling at 95°F (Indoor // Outdoor) °F 80 DB, 67 WB // 95 DB, 75 WB
[2]Heating at 47°F (Indoor // Outdoor) °F 70 DB, 60 WB // 47 DB, 43 WB
[3]Heating at 17°F (Indoor // Outdoor) °F 70 DB, 60 WB // 17 DB, 15 WB
[5]Heating at 5°F (Indoor // Outdoor) °F 70 DB, 60 WB // 5 DB, 4 WB
[*]Indoor/Outdoor Unit Operating Temperature Range (Cooling Air Temp [Maximum / Minimum]): • Applications should be restricted to comfort cooling only; equipment cooling applications are not recommended for low ambient temperature conditions.
[**]Outdoor Unit Operating Temperature Range (Cooling Thermal Lock-out / Re-start Temperatures; Heating Thermal Lock-out / Re-start Temperatures): • System cuts out in heating mode and automatically restarts at these temperatures.
[6]Heating at -4°F (Indoor // Outdoor) °F 70 DB, 60 WB // -4 DB, -5 WB

© 2026 Mitsubishi Electric Trane HVAC US LLC. All rights reserved.

INDOOR UNIT ACCESSORIES: MSZ-EX18NLW

Condensate	Blue Diamond MegaBlue Condensate Pump with Reservoir Sensor 115-230V up to 170k BTU/h	☐	X87-835
	Refco Condensate Pump 100-240V up to 120k BTU/h	☐	COMBI
	Blue Diamond MaxiBlue Advanced Mini Condensate Pump w Reservoir Sensor 110V up to 48000 BTUH recommended	☐	X87-711
	Drain Pan Level SensorControl	☐	SS610E
	Blue Diamond MicroBlue Mini Condensate Pump 110208230V up to 18000 BTUH	☐	X86-003
	REFCO PUMP 100-240 VAC 506O HZ	☐	X86-011
	Sauermann Condensate Pump 120-230V up to 60k BTU/h	☐	SI30-230
	Refco Condensate Pump 100-240 VAC	☐	GOBI-II
	Blue Diamond Sensor Extension Cable 15 Ft	☐	C13-103
	Blue Diamond MaxiBlue Condensate Pump with Reservoir Sensor 115-230V up to 48k BTU/h	☐	X88-721
Control Interface	Procon BACnet® and Modbus® Interface	☐	PAC-UKPRC001-CN-1
	Wireless Interface 2 for Comfrot app	☐	PAC-USWHS002-WF-2
	Thermostat Interface for 3rd Party Thermostats	☐	PAC-US445CN-1
	Airzone Wireless Lite Controller Black	☐	AZZBSLITERN
	Airzone Wired Blueface Controller White	☐	AZZBSBLUEZEROCB
	Airzone Wired Blueface Controller Black	☐	AZZBSBLUEZEROCN
	kumo station® for Comfort app	☐	PAC-WHS01HC-E
	Airzone Wireless Lite Controller White	☐	AZZBSLITERB
	M-NET adapter ²	☐	MAC-334IF-E
	Airzone Wireless Think Controller White	☐	AZZBSTHINKRB
	Airzone Wireless Think Controller Black	☐	AZZBSTHINKRN
	IT Extender	☐	PAC-WHS01IE-E
Disconnect Switch	30A600VUL fits 2 X 4 utility box - White	☐	TAZ-MS303W
	30A600VUL fits 2 X 4 utility box - Black	☐	TAZ-MS303
Drain Hose	Flexible Mini-Split Drain Hose	☐	DRX-16
Filter	Microparticle Filter	☐	MAC-EMF515FT-E
	Electro Static Anti-allergy Enzyme Filter	☐	MAC-2320FT-E
Lineset	1/4 x 1/2 Lineset Twin-Tube Insulation - 50 feet	☐	MLS141212T-50
	1/4 x 1/2 Lineset Twin-Tube Insulation - 65 feet	☐	MLS141212T-65
	1/4 x 1/2 Lineset Twin-Tube Insulation - 30 feet	☐	MLS141212T-30
	1/4 x 1/2 Lineset Twin-Tube Insulation - 100 feet	☐	MLS141212T-100
	1/4 x 1/2 Lineset Twin-Tube Insulation - 15 feet	☐	MLS141212T-15
Remote Sensor	Wireless temperature and humidity sensor for Comfort app	☐	PAC-USWHS003-TH-1
	Remote Temperature Sensor for MFZ MLZ and MSZ models	☐	M21EAA307
Terminal Signal Adapter	Backup Heat Relay Kit	☐	CN24RELAY-KIT-CM3
Wired Remote Controller	Simple Direct Wired Remote Controller	☐	PAC-SDW01RC-1
	Deluxe Wired MA Remote Controller ¹	☐	PAR-42MAAUB
	Touch MA Remote Controller ¹	☐	PAR-CT01MAU-SB
	Simple MA Remote Controller ¹	☐	PAC-YT53CRAU-J
Wireless Remote Controller	Wireless RedLINK™ Remote Controller	☐	MHK2
	Lockdown Bracket for Wireless Handheld Remote Controllers	☐	RCMKP1CB

Notes

[2]Allows IDU Connection to MA Controller: *Deluxe MA Remote Controller *Simple MA Controller *Touch MA Controller
[1]Requires MAC-334IF-E Interface to connect MA controller

© 2026 Mitsubishi Electric Trane HVAC US LLC. All rights reserved.

OUTDOOR UNIT ACCESSORIES: SUZ-AA18NL

Air Outlet Guide	Air Outlet Guide	☐ MAC-890SG-E
Control/Service Tool	Maintenance Tool Interface	☐ PAC-USCMS-MN-1
	M- & P-Series Maintenance Tool Cable Set	☐ M21EC0397
Drain Socket	Drain Socket	☐ MAC-871DS
Hail Guards	Hail Guard	☐ HG-A7
Mini-Split Wire	14 Gauge 4 wire MiniSplit Cable250 ft roll	☐ S144-250
	14 Gauge 4 wire MiniSplit Cable50 ft roll	☐ S144-50
	14 Gauge 4 wire Armored MiniSplit Cable50 ft roll	☐ SW144-50
	14 Gauge 4 wire Armored MiniSplit Cable250 ft roll	☐ SW144-250
Mounting Pad	Condensing Unit Mounting Pad 16 x 36 x 3	☐ ULTRILITE1
Muffler	Muffler	☐ MAC-002MF-E
Optional Defrost Heater	Base Heater	☐ MAC-660BH-U
Snow/Rain Diverter	SnowRain Diverter	☐ SRD-3
Stand	Condenser Wall Bracket	☐ QSWB2000M-1
	24 Single Fan Stand	☐ QSMS2401M
	Outdoor Unit Stand 12 High	☐ QSMS1201M
	Condenser Wall Bracket - Stainless Steel Finish	☐ QSWBSS
	Outdoor Unit 3-14 inch Mounting Base Pair - Plastic	☐ DSD-400P
	18 Single Fan Stand	☐ QSMS1801M
Notes		

© 2026 Mitsubishi Electric Trane HVAC US LLC. All rights reserved.

INDOOR UNIT DIMENSIONS: MSZ-EX18NLW

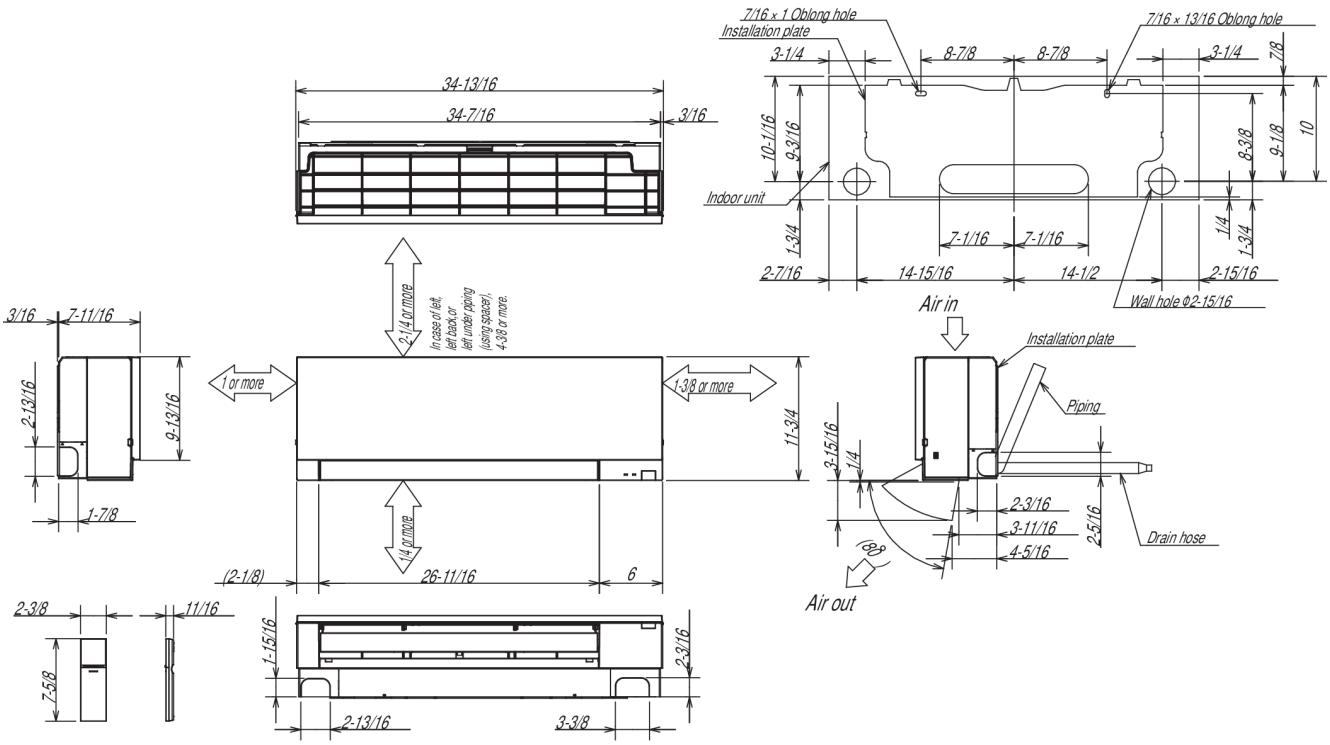

MSZ-EX09/12NL

Piping	Insulation	φ1-7/16 O.D
	Liquid line	φ1/4 - 19-11/16 (Flared connection φ1/4)
	Gas line	φ3/8 - 16-15/16 (Flared connection φ3/8)
Drain hose		Insulation φ1-1/8 Connected part φ5/8 O.D active length 15-3/8

Note: Extension pipe size refer to the specifications table.

MSZ-EX15/18NL

Piping	Insulation	φ1-7/16 O.D
	Liquid line	φ1/4 - 19-11/16 (Flared connection φ1/4)
	Gas line	φ3/8 - 16-15/16 (Flared connection φ1/2)
Drain hose		Insulation φ1-1/8 Connected part φ5/8 O.D active length 15-3/8

Note: Extension pipe size refer to the specifications table.

© 2026 Mitsubishi Electric Trane HVAC US LLC. All rights reserved.

OUTDOOR UNIT DIMENSIONS: SUZ-AA18NL

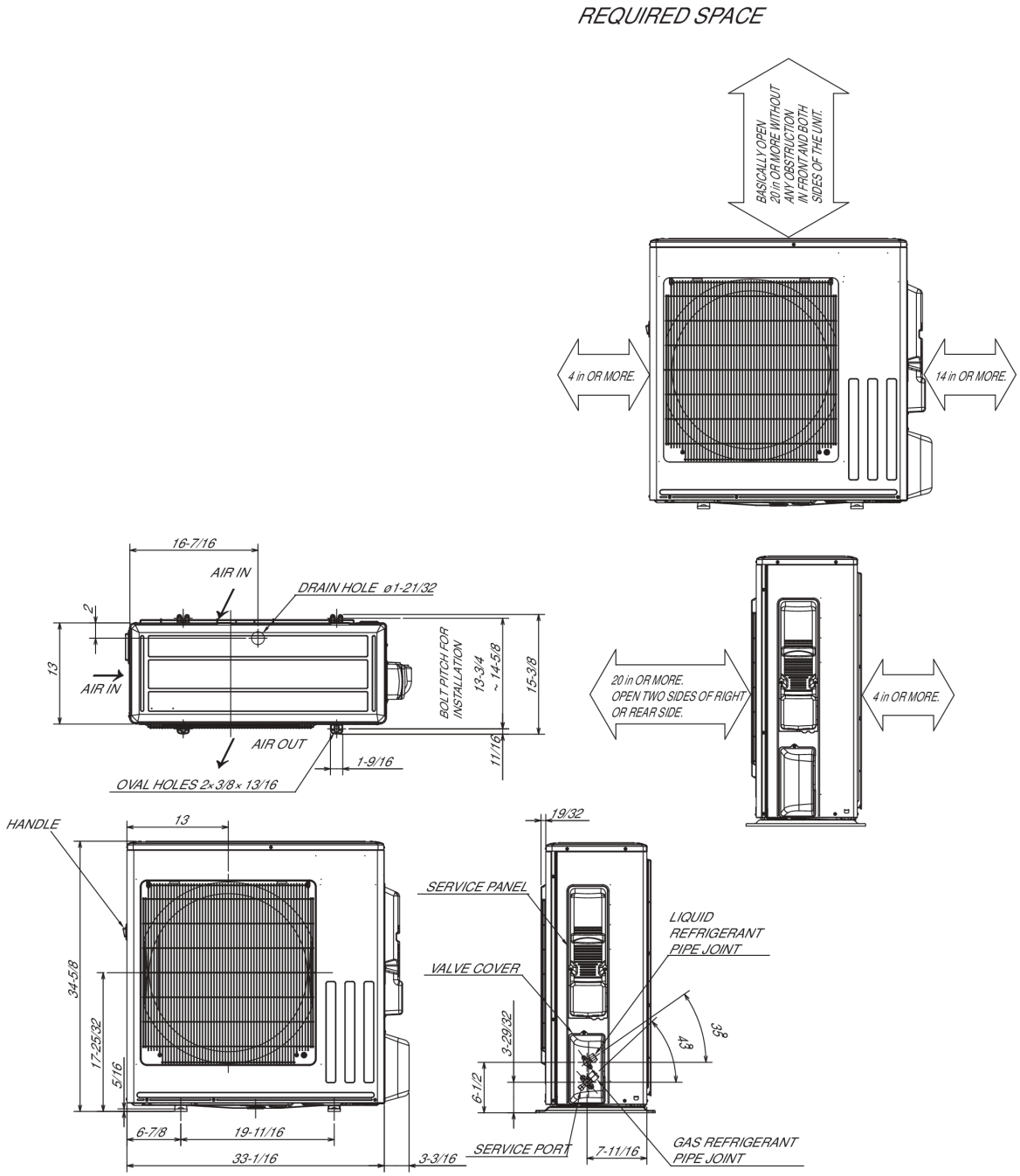

REFRIGERANT PIPE JOINT	LIQUID REFRIGERANT PIPE	FLARED ø6.35 (1/4")
	GAS REFRIGERANT PIPE	AA09/12 : FLARED ø9.52 (3/8") AA15/18 : FLARED ø12.7 (1/2") AA24/30/36 : FLARED ø15.88 (5/8")

1340 Satellite Boulevard Suwanee, GA 30024
Toll Free: 800-433-4822 · mitsubishicomfort.com

METUS_2026-08_PROPIN

Specifications are subject to change without notice.

© 2026 Mitsubishi Electric Trane HVAC US LLC. All rights reserved.