MSZ-EX18NLW & SUZ-AA18NLHZ
16,400 BTU/H WALL-MOUNTED INDOOR UNIT
16,400 BTU/H HYPER HEAT PUMP OUTDOOR UNIT

Job Name:			
System Reference:		**Date:**	

INDOOR Unit ... MSZ-EX18NLW

OUTDOOR Unit ... SUZ-AA18NLHZ

INDOOR UNIT FEATURES

- Econo Cool: Econo Cool is feature that temporarily adjusts the airflow to maintain comfort while using less energy.
- Swing Mode: An indoor unit with this capability can move air throughout the room like an oscillating fan.
- Smart Set: Smart Set conveniently adjusts to the preferred preset temperature by pressing a single button on the remote control.
- Dual Barrier Coating: Dual Barrier Coating reduces the collection of contaminants like dust, fibers, smoke, and oil on the inner surface of the indoor unit.
- Quiet: Outdoor units are as quiet as a typical conversation, and most indoor units are whisper quiet.
- Electrostatic Enzyme Filter (Built-In): Charged with static electricity, the Electrostatic filter is designed to attract and filter charged particles which can include airborne non-living particulates.

OUTDOOR UNIT FEATURES

- H2i® Hyper-Heating: 100% heating capacity down to 5° F .
- Inverter Driven Compressor: Inverter technology uses only the precise amount of energy needed to keep a space comfortable.
- Blue Fin Coating: Anti-corrosion coating that protects the outdoor heat exchanger against salt, sulfur, and other airborne contaminants that impact the efficiency and performance of the outdoor units.
- Base Pan Heater: This advanced base pan heater helps to prevent interrupted operation due to water freezing after a defrost cycle, ensuring your warmth and comfort during colder weather.
- Seacoast Protection: An anti-corrosion treatment applied to the aluminum fins of the heat exchanger of the outdoor unit to protect against corrosion caused by salt, sulfur, and other airborne contaminants, especially in coastal and industrial areas.

© 2026 Mitsubishi Electric Trane HVAC US LLC. All rights reserved.

SPECIFICATIONS: MSZ-EX18NLW & SUZ-AA18NLHZ

Cooling at 95F[1]	Maximum Capacity	Btu/h	16400
	Rated Capacity	Btu/h	16400
	Minimum Capacity	Btu/h	5300
	Maximum Power Input	W	1390
	Rated Power Input	W	1390
	Moisture Removal	Pints/h	4.50
	Sensible Heat Factor		0.69
	Power Factor [208V / 230V]	%	95 / 95
Heating at 47F[2]	Maximum Capacity	Btu/h	21700
	Rated Capacity	Btu/h	20000
	Minimum Capacity	Btu/h	8400
	Maximum Power Input	W	1960
	Rated Power Input	W	1700
	Power Factor [208V / 230V]	%	92 / 92
Heating at 17F[3]	Maximum Capacity	Btu/h	20000
	Rated Capacity	Btu/h	13100
	Maximum Power Input	W	2910
	Rated Power Input	W	1470
Heating at 5F[5]	Maximum Capacity	Btu/h	20000
	Maximum Power Input	W	2930
Heating at -13F[9]	Maximum Capacity	Btu/h	12100
Efficiency	SEER2		17.50
	EER2[1]		11.70
	HSPF2 [IV]		10.20
	COP at 47°F[2]		3.40
	COP at 17°F at Maximum Capacity[3]		2
	COP at 5°F at Maximum Capacity[5]		2.00
	COP at -13°F at Maximum Capacity[9]		1.40
	ENERGY STAR® Certified		Yes
Electrical	Voltage, Phase, Frequency	V AC / V AC , ø , Hz	208 / 230 , 1 , 60
	Guaranteed Voltage Range	V AC	198 - 253
	Voltage: Indoor - Outdoor, S1-S2	V AC	208/230
	Voltage: Indoor - Outdoor, S2-S3	V DC	12-24
	Short-circuit Current Rating [SCCR]	kA	5
	Recommended Fuse/Breaker Size (Outdoor)	A	30
	Recommended Wire Size [Indoor - Outdoor]	AWG	14
Indoor Unit	Fan Motor Output	W	30
	Fan Motor Type		DC Motor
	Airflow Rate at Cooling, Dry	CFM	208 , 248 , 288 , 343 , 408
	Airflow Rate at Cooling, Wet	CFM	188 , 223 , 259 , 309 , 367
	Airflow Rate at Heating, Dry	CFM	232 , 264 , 313 , 347 , 497
	Sound Pressure Level [Cooling]	dB (A)	30 , 33 , 36 , 40 , 43
	Sound Pressure Level [Heating]	dB (A)	30 , 33 , 37 , 43 , 49
	Drain Pipe Size O.D.	inch [mm]	5/8 [16]
	Condensate Lift Mechanism, Max Height	inch	0
	Dual Barrier Coating on Heat Exchanger		Yes
	Dual Barrier Coating on Fan		Yes
	External Finish Color		0.7PB 9.2/0.4
	Unit Dimensions (W x D x H)	inch x inch x inch [mm x mm x mm]	34-13/16 x 7-11/16 x 11-3/4 [885 x 195 x 299]
	Package Dimensions (W x D x H)	inch x inch x inch [mm x mm x mm]	35-5/8 x 14-3/16 x 10-11/16 [980 x 360 x 270]
	Unit Weight	lbs [kg]	26 [11.50]
	Package Weight	lbs [kg]	29 [13]
IDU Operating Temp. Range	Cooling Intake Air Temp [Maximum / Minimum]	°FDB , °FWB / °FDB , °FWB	90 , 73 / 66 , 59
	Heating Intake Air Temp [Maximum / Minimum]	°FDB	83 / 50
Outdoor Unit	MCA	A	25

Notes

[1]Cooling at 95°F (Indoor // Outdoor) °F 80 DB, 67 WB // 95 DB, 75 WB
[2]Heating at 47°F (Indoor // Outdoor) °F 70 DB, 60 WB // 47 DB, 43 WB
[3]Heating at 17°F (Indoor // Outdoor) °F 70 DB, 60 WB // 17 DB, 15 WB
[5]Heating at 5°F (Indoor // Outdoor) °F 70 DB, 60 WB // 5 DB, 4 WB
[9]Heating at -13°F (Indoor // Outdoor) °F 70 DB, 60 WB // -13 DB, -14 WB
[*]Indoor/Outdoor Unit Operating Temperature Range (Cooling Air Temp [Maximum / Minimum]): • Applications should be restricted to comfort cooling only; equipment cooling applications are not recommended for low ambient temperature conditions.
[**]Outdoor Unit Operating Temperature Range (Cooling Thermal Lock-out / Re-start Temperatures; Heating Thermal Lock-out / Re-start Temperatures): • System cuts out in heating mode and automatically restarts at these temperatures.

© 2026 Mitsubishi Electric Trane HVAC US LLC. All rights reserved.

Outdoor Unit	MOCP	A	42
	Fan Motor Output	W	50
	Airflow Rate Cooling	CFM	2193
	Airflow Rate Heating	CFM	1949
	Defrost Method		Reverse Cycle
	Coating on Heat Exchanger (Bluefin, Sea Coast)		Yes , Yes
	Sound Pressure Level, Cooling[1]	dB (A)	54
	Sound Pressure Level, Heating[2]	dB (A)	55
	Compressor Type		Twin Rotary
	Compressor Model		SRB172FQHMT
	Compressor Oil [Type // Charge]	// oz	RM68EH // 14.5
	External Finish Color		Munsell No.3Y 7.8/1.1
	Base Pan Heater		Built-in
	Unit Dimensions (W x D x H)	inch x inch x inch [mm x mm x mm]	33-1/16 x 13 x 34-5/8 [840 x 330 x 880]
	Package Dimensions (W x D x H)	inch x inch x inch [mm x mm x mm]	38-5/8 x 16-9/16 x 39 [980 x 420 x 990]
	Unit Weight	lbs [kg]	115 [52.2]
	Package Weight	lbs [kg]	133 [60.3]
ODU Operating Temp. Range	Cooling Intake Air Temp [Maximum / Minimum*]	°FDB	115 / 14
	Cooling Thermal Lock-out / Re-start Temperatures**	°FDB	-1 / 3
	Heating Intake Air Temp [Maximum / Minimum]	°FDB , °FWB / °FDB , °FWB	75 , 65 / -13 , -14
	Heating Thermal Lock-out / Re-start Temperatures**	°FDB	-22.5 / -14
Refrigerant	Type		R454B
	Pre-Charged Refrigerant Amount	lbs , oz	3 ,
	Maximum Pre-Charged Piping Length	ft [m]	25 [7.60]
	Additional Refrigerant Charge Per Additional Piping Length	oz/ft	0.22
Piping	Liquid Pipe Size O.D. [Flared]	inch [mm]	1/4 [6.35]
	Gas Pipe Size O.D. [Flared]	inch [mm]	1/2 [12.72]
	Maximum Piping Length	ft [m]	100 [30]
	Maximum Height Difference	ft [m]	50 [15]
	Maximum Number of Bends		10

Notes

[1]Cooling at 95°F (Indoor // Outdoor) °F 80 DB, 67 WB // 95 DB, 75 WB
[2]Heating at 47°F (Indoor // Outdoor) °F 70 DB, 60 WB // 47 DB, 43 WB
[3]Heating at 17°F (Indoor // Outdoor) °F 70 DB, 60 WB // 17 DB, 15 WB
[5]Heating at 5°F (Indoor // Outdoor) °F 70 DB, 60 WB // 5 DB, 4 WB
[9]Heating at -13°F (Indoor // Outdoor) °F 70 DB, 60 WB // -13 DB, -14 WB
[*]Indoor/Outdoor Unit Operating Temperature Range (Cooling Air Temp [Maximum / Minimum]): • Applications should be restricted to comfort cooling only; equipment cooling applications are not recommended for low ambient temperature conditions.
[**]Outdoor Unit Operating Temperature Range (Cooling Thermal Lock-out / Re-start Temperatures; Heating Thermal Lock-out / Re-start Temperatures): • System cuts out in heating mode and automatically restarts at these temperatures.

© 2026 Mitsubishi Electric Trane HVAC US LLC. All rights reserved.

INDOOR UNIT ACCESSORIES: MSZ-EX18NLW

Condensate	Blue Diamond MicroBlue Mini Condensate Pump 110208230V up to 18000 BTUH	X86-003
	Blue Diamond MaxiBlue Advanced Mini Condensate Pump w Reservoir Sensor 110V up to 48000 BTUH recommended	X87-711
	Blue Diamond MegaBlue Condensate Pump with Reservoir Sensor 115-230V up to 170k BTU/h	X87-835
	Refco Condensate Pump 100-240V up to 120k BTU/h	COMBI
	REFCO PUMP 100-240 VAC 506O HZ	X86-011
	Refco Condensate Pump 100-240 VAC	GOBI-II
	Sauermann Condensate Pump 120-230V up to 60k BTU/h	SI30-230
	Blue Diamond Sensor Extension Cable 15 Ft	C13-103
	Drain Pan Level SensorControl	SS610E
	Blue Diamond MaxiBlue Condensate Pump with Reservoir Sensor 115-230V up to 48k BTU/h	X88-721
Control Interface	M-NET adapter ²	MAC-334IF-E
	Airzone Wired Blueface Controller Black	AZZBSBLUEZEROCN
	Airzone Wireless Think Controller White	AZZBSTHINKRB
	Airzone Wireless Lite Controller Black	AZZBSLITERN
	Wireless Interface 2 for Comfrot app	PAC-USWHS002-WF-2
	Airzone Wireless Think Controller Black	AZZBSTHINKRN
	Airzone Wired Blueface Controller White	AZZBSBLUEZEROCB
	Airzone Wireless Lite Controller White	AZZBSLITERB
	Thermostat Interface for 3rd Party Thermostats	PAC-US445CN-1
	IT Extender	PAC-WHS01IE-E
	kumo station® for Comfort app	PAC-WHS01HC-E
	Procon BACnet® and Modbus® Interface	PAC-UKPRC001-CN-1
Disconnect Switch	30A600VUL fits 2 X 4 utility box - White	TAZ-MS303W
	30A600VUL fits 2 X 4 utility box - Black	TAZ-MS303
Drain Hose	Flexible Mini-Split Drain Hose	DRX-16
Filter	Electro Static Anti-allergy Enzyme Filter	MAC-2320FT-E
	Microparticle Filter	MAC-EMF515FT-E
Lineset	1/4 x 1/2 Lineset Twin-Tube Insulation - 65 feet	MLS141212T-65
	1/4 x 1/2 Lineset Twin-Tube Insulation - 30 feet	MLS141212T-30
	1/4 x 1/2 Lineset Twin-Tube Insulation - 100 feet	MLS141212T-100
	1/4 x 1/2 Lineset Twin-Tube Insulation - 15 feet	MLS141212T-15
	1/4 x 1/2 Lineset Twin-Tube Insulation - 50 feet	MLS141212T-50
Remote Sensor	Wireless temperature and humidity sensor for Comfort app	PAC-USWHS003-TH-1
	Remote Temperature Sensor for MFZ MLZ and MSZ models	M21EAA307
Terminal Signal Adapter	Backup Heat Relay Kit	CN24RELAY-KIT-CM3
Wired Remote Controller	Touch MA Remote Controller ¹	PAR-CT01MAU-SB
	Simple Direct Wired Remote Controller	PAC-SDW01RC-1
	Deluxe Wired MA Remote Controller ¹	PAR-42MAAUB
	Simple MA Remote Controller ¹	PAC-YT53CRAU-J
Wireless Remote Controller	Wireless RedLINK™ Remote Controller	MHK2
	Lockdown Bracket for Wireless Handheld Remote Controllers	RCMKP1CB

Notes

[1]Requires MAC-334IF-E Interface to connect MA controller
[2]Allows IDU Connection to MA Controller: *Deluxe MA Remote Controller *Simple MA Controller *Touch MA Controller

© 2026 Mitsubishi Electric Trane HVAC US LLC. All rights reserved.

OUTDOOR UNIT ACCESSORIES: SUZ-AA18NLHZ

Air Outlet Guide	Air Outlet Guide	☐ MAC-890SG-E
Control/Service Tool	Maintenance Tool Interface	☐ PAC-USCMS-MN-1
	M- & P-Series Maintenance Tool Cable Set	☐ M21EC0397
Drain Socket	Drain Socket	☐ MAC-871DS
Hail Guards	Hail Guard	☐ HG-A7
Mini-Split Wire	14 Gauge 4 wire Armored MiniSplit Cable50 ft roll	☐ SW144-50
	14 Gauge 4 wire MiniSplit Cable250 ft roll	☐ S144-250
	14 Gauge 4 wire MiniSplit Cable50 ft roll	☐ S144-50
	14 Gauge 4 wire Armored MiniSplit Cable250 ft roll	☐ SW144-250
Mounting Pad	Condensing Unit Mounting Pad 16 x 36 x 3	☐ ULTRILITE1
Muffler	Muffler	☐ MAC-002MF-E
Snow/Rain Diverter	SnowRain Diverter	☐ SRD-3
Stand	24 Single Fan Stand	☐ QSMS2401M
	18 Single Fan Stand	☐ QSMS1801M
	Condenser Wall Bracket	☐ QSWB2000M-1
	Outdoor Unit Stand 12 High	☐ QSMS1201M
	Condenser Wall Bracket - Stainless Steel Finish	☐ QSWBSS
	Outdoor Unit 3-14 inch Mounting Base Pair - Plastic	☐ DSD-400P
Notes		

© 2026 Mitsubishi Electric Trane HVAC US LLC. All rights reserved.

INDOOR UNIT DIMENSIONS: MSZ-EX18NLW

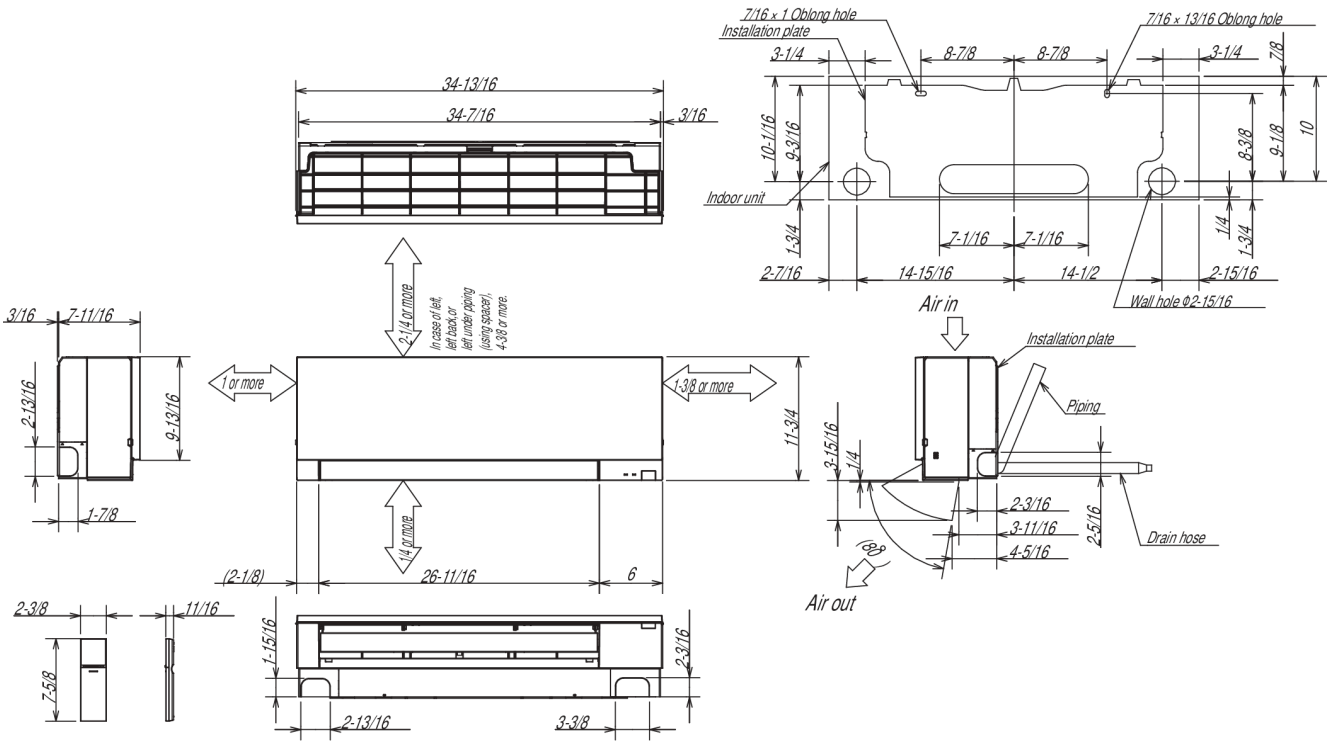

MSZ-EX09/12NL

Piping	Insulation	φ1-7/16 O.D
	Liquid line	φ1/4 - 19-11/16 (Flared connection φ1/4)
	Gas line	φ3/8 - 16-15/16 (Flared connection φ3/8)
Drain hose		Insulation φ1-1/8 Connected part φ5/8 O.D active length 15-3/8

Note: Extension pipe size refer to the specifications table.

MSZ-EX15/18NL

Piping	Insulation	φ1-7/16 O.D
	Liquid line	φ1/4 - 19-11/16 (Flared connection φ1/4)
	Gas line	φ3/8 - 16-15/16 (Flared connection φ1/2)
Drain hose		Insulation φ1-1/8 Connected part φ5/8 O.D active length 15-3/8

Note: Extension pipe size refer to the specifications table.

© 2026 Mitsubishi Electric Trane HVAC US LLC. All rights reserved.

OUTDOOR UNIT DIMENSIONS: SUZ-AA18NLHZ

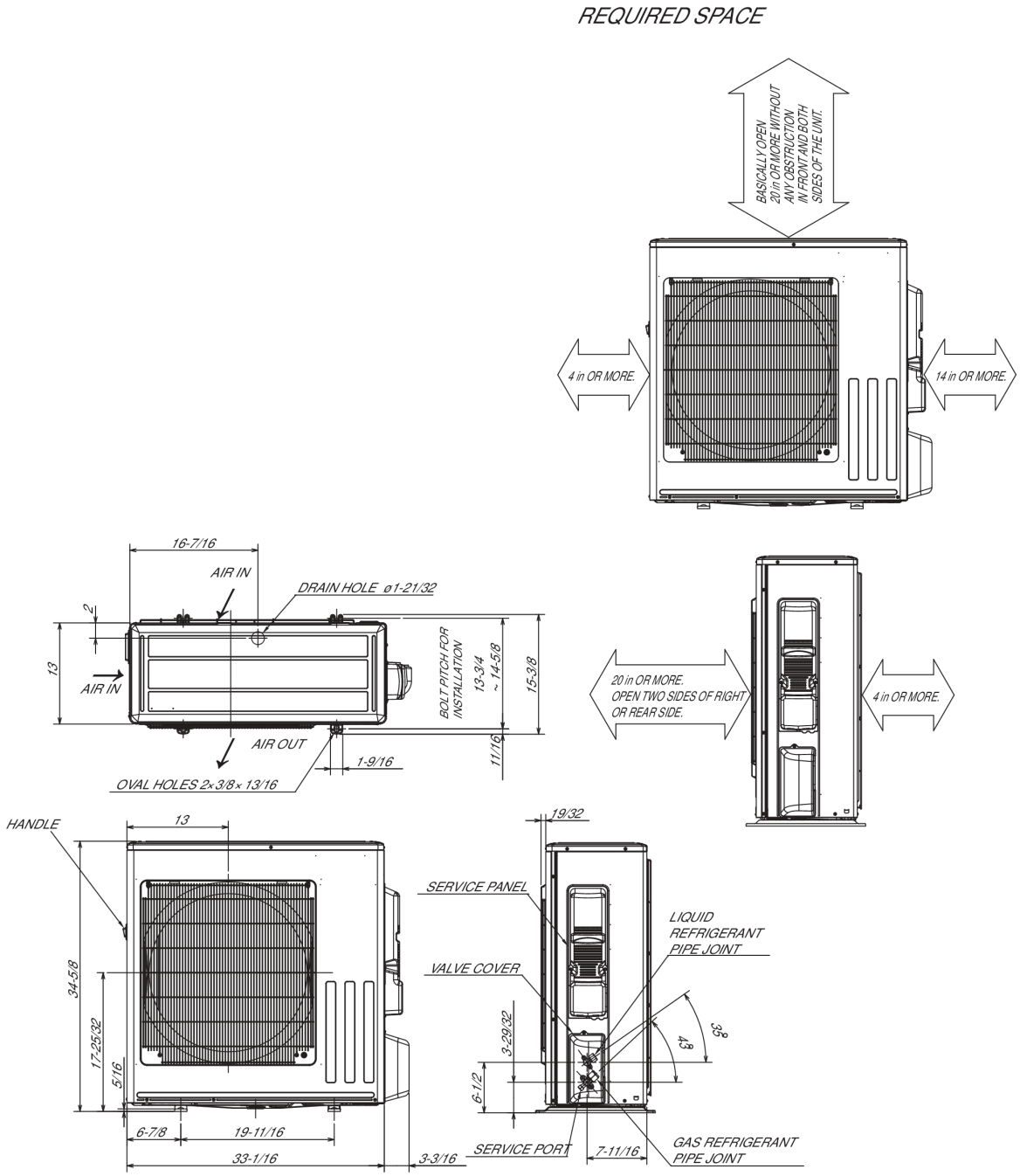

REFRIGERANT PIPE JOINT	LIQUID REFRIGERANT PIPE	FLARED ø6.35 (1/4")
	GAS REFRIGERANT PIPE	AA09/12 : FLARED ø9.52 (3/8") AA15/18 : FLARED ø12.7 (1/2") AA24/30/36 : FLARED ø15.88 (5/8")

1340 Satellite Boulevard Suwanee, GA 30024
Toll Free: 800-433-4822 · mitsubishicomfort.com

METUS_2026-08_PROPIN

Specifications are subject to change without notice.
© 2026 Mitsubishi Electric Trane HVAC US LLC. All rights reserved.