MSZ-EX12NLS & SUZ-AA12NL
12,000 BTU/H WALL-MOUNTED INDOOR UNIT
12,000 BTU/H HEAT PUMP OUTDOOR UNIT

Job Name:			
System Reference:		**Date:**	

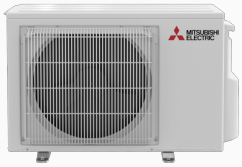

INDOOR Unit ... MSZ-EX12NLS

OUTDOOR Unit ... SUZ-AA12NL

INDOOR UNIT FEATURES

- Econo Cool: Econo Cool is feature that temporarily adjusts the airflow to maintain comfort while using less energy.
- Swing Mode: An indoor unit with this capability can move air throughout the room like an oscillating fan.
- Smart Set: Smart Set conveniently adjusts to the preferred preset temperature by pressing a single button on the remote control.
- Dual Barrier Coating: Dual Barrier Coating reduces the collection of contaminants like dust, fibers, smoke, and oil on the inner surface of the indoor unit.
- Quiet: Outdoor units are as quiet as a typical conversation, and most indoor units are whisper quiet.
- Electrostatic Enzyme Filter (Built-In): Charged with static electricity, the Electrostatic filter is designed to attract and filter charged particles which can include airborne non-living particulates.

OUTDOOR UNIT FEATURES

- Inverter Driven Compressor: Inverter technology uses only the precise amount of energy needed to keep a space comfortable.
- Blue Fin Coating: Anti-corrosion coating that protects the outdoor heat exchanger against salt, sulfur, and other airborne contaminants that impact the efficiency and performance of the outdoor units.
- Seacoast Protection: An anti-corrosion treatment applied to the aluminum fins of the heat exchanger of the outdoor unit to protect against corrosion caused by salt, sulfur, and other airborne contaminants, especially in coastal and industrial areas.

© 2026 Mitsubishi Electric Trane HVAC US LLC. All rights reserved.

SPECIFICATIONS: MSZ-EX12NLS & SUZ-AA12NL

Cooling at 95F[1]	Maximum Capacity	Btu/h	12000
	Rated Capacity	Btu/h	12000
	Minimum Capacity	Btu/h	2700
	Maximum Power Input	W	980
	Rated Power Input	W	980
	Moisture Removal	Pints/h	1.90
	Sensible Heat Factor		0.82
	Power Factor [208V / 230V]	%	99 / 99
Heating at 47F[2]	Maximum Capacity	Btu/h	15000
	Rated Capacity	Btu/h	15000
	Minimum Capacity	Btu/h	5300
	Maximum Power Input	W	1200
	Rated Power Input	W	1200
	Power Factor [208V / 230V]	%	95 / 95
Heating at 17F[3]	Maximum Capacity	Btu/h	9600
	Rated Capacity	Btu/h	9600
	Maximum Power Input	W	1030
	Rated Power Input	W	1030
Heating at 5F[5]	Maximum Capacity	Btu/h	7800
	Maximum Power Input	W	1143
Heating at -4F[6]	Maximum Capacity	Btu/h	6500
Efficiency	SEER2		21.70
	EER2[1]		12.20
	HSPF2 [IV]		10
	COP at 47°F[2]		3.60
	COP at 17°F at Maximum Capacity[3]		2.70
	COP at 5°F at Maximum Capacity[5]		2.00
	COP at -4°F at Maximum Capacity[6]		2.21
	ENERGY STAR® Certified		Yes
Electrical	Voltage, Phase, Frequency	V AC / V AC , ø , Hz	208 / 230 , 1 , 60
	Guaranteed Voltage Range	V AC	198 - 253
	Voltage: Indoor - Outdoor, S1-S2	V AC	208/230
	Voltage: Indoor - Outdoor, S2-S3	V DC	12-24
	Short-circuit Current Rating [SCCR]	kA	5
	Recommended Fuse/Breaker Size (Outdoor)	A	15
	Recommended Wire Size [Indoor - Outdoor]	AWG	14
Indoor Unit	Fan Motor Output	W	30
	Fan Motor Type		DC Motor
	Airflow Rate at Cooling, Dry	CFM	143 , 164 , 228 , 305 , 391
	Airflow Rate at Cooling, Wet	CFM	128 , 147 , 205 , 274 , 352
	Airflow Rate at Heating, Dry	CFM	143 , 164 , 205 , 244 , 479
	Sound Pressure Level [Cooling]	dB (A)	21 , 24 , 29 , 36 , 42
	Sound Pressure Level [Heating]	dB (A)	21 , 24 , 30 , 38 , 46
	Drain Pipe Size O.D.	inch [mm]	5/8 [16]
	Condensate Lift Mechanism, Max Height	inch	0
	Dual Barrier Coating on Heat Exchanger		Yes
	Dual Barrier Coating on Fan		Yes
	External Finish Color		3.1PB 8.2/0.2
	Unit Dimensions (W x D x H)	inch x inch x inch [mm x mm x mm]	34-13/16 x 7-11/16 x 11-3/4 [885 x 195 x 299]
	Package Dimensions (W x D x H)	inch x inch x inch [mm x mm x mm]	35-5/8 x 14-3/16 x 10-11/16 [980 x 360 x 270]
	Unit Weight	lbs [kg]	26 [11.50]
	Package Weight	lbs [kg]	29 [13]
IDU Operating Temp. Range	Cooling Intake Air Temp [Maximum / Minimum]	°FDB , °FWB / °FDB , °FWB	90 , 73 / 66 , 59
	Heating Intake Air Temp [Maximum / Minimum]	°FDB	83 / 50
Outdoor Unit	MCA	A	14

Notes

[1]Cooling at 95°F (Indoor // Outdoor) °F 80 DB, 67 WB // 95 DB, 75 WB
[2]Heating at 47°F (Indoor // Outdoor) °F 70 DB, 60 WB // 47 DB, 43 WB
[3]Heating at 17°F (Indoor // Outdoor) °F 70 DB, 60 WB // 17 DB, 15 WB
[5]Heating at 5°F (Indoor // Outdoor) °F 70 DB, 60 WB // 5 DB, 4 WB
[*]Indoor/Outdoor Unit Operating Temperature Range (Cooling Air Temp [Maximum / Minimum]): • Applications should be restricted to comfort cooling only; equipment cooling applications are not recommended for low ambient temperature conditions.
[**]Outdoor Unit Operating Temperature Range (Cooling Thermal Lock-out / Re-start Temperatures; Heating Thermal Lock-out / Re-start Temperatures): • System cuts out in heating mode and automatically restarts at these temperatures.
[6]Heating at -4°F (Indoor // Outdoor) °F 70 DB, 60 WB // -4 DB, -5 WB

© 2026 Mitsubishi Electric Trane HVAC US LLC. All rights reserved.

Outdoor Unit	MOCP	A	23
	Fan Motor Output	W	55
	Airflow Rate Cooling	CFM	1229
	Airflow Rate Heating	CFM	1172
	Defrost Method		Reverse Cycle
	Coating on Heat Exchanger (Bluefin, Sea Coast)		Yes , Yes
	Sound Pressure Level, Cooling[1]	dB (A)	49
	Sound Pressure Level, Heating[2]	dB (A)	51
	Compressor Type		Twin Rotary
	Compressor Model		SRB092FQFMC
	Compressor Oil [Type // Charge]	// oz	RM68EH // 11.80
	External Finish Color		Munsell No.3Y 7.8/1.1
	Base Pan Heater		Optional
	Unit Dimensions (W x D x H)	inch x inch x inch [mm x mm x mm]	31-1/2 x 11-1/4 x 21-5/8 [800 x 285 x 550]
	Package Dimensions (W x D x H)	inch x inch x inch [mm x mm x mm]	37-1/16 x 15 x 24-13/16 [940 x 380 x 630]
	Unit Weight	lbs [kg]	81 [37]
	Package Weight	lbs [kg]	88.18 [40]
ODU Operating Temp. Range	Cooling Intake Air Temp [Maximum / Minimum*]	°FDB	115 / 14
	Cooling Thermal Lock-out / Re-start Temperatures**	°FDB	-1 / 3
	Heating Intake Air Temp [Maximum / Minimum]	°FDB , °FWB / °FDB , °FWB	75 , 65 / -4 , -5
	Heating Thermal Lock-out / Re-start Temperatures**	°FDB	-14 / -4
Refrigerant	Type		R454B
	Pre-Charged Refrigerant Amount	lbs , oz	2 ,
	Maximum Pre-Charged Piping Length	ft [m]	65 [7.60]
	Additional Refrigerant Charge Per Additional Piping Length	oz/ft	0
Piping	Liquid Pipe Size O.D. [Flared]	inch [mm]	1/4 [6.35]
	Gas Pipe Size O.D. [Flared]	inch [mm]	3/8 [9.52]
	Maximum Piping Length	ft [m]	65 [20]
	Maximum Height Difference	ft [m]	40 [12]
	Maximum Number of Bends		10

Notes

[1]Cooling at 95°F (Indoor // Outdoor) °F 80 DB, 67 WB // 95 DB, 75 WB
[2]Heating at 47°F (Indoor // Outdoor) °F 70 DB, 60 WB // 47 DB, 43 WB
[3]Heating at 17°F (Indoor // Outdoor) °F 70 DB, 60 WB // 17 DB, 15 WB
[5]Heating at 5°F (Indoor // Outdoor) °F 70 DB, 60 WB // 5 DB, 4 WB
[*]Indoor/Outdoor Unit Operating Temperature Range (Cooling Air Temp [Maximum / Minimum]): • Applications should be restricted to comfort cooling only; equipment cooling applications are not recommended for low ambient temperature conditions.
[**]Outdoor Unit Operating Temperature Range (Cooling Thermal Lock-out / Re-start Temperatures; Heating Thermal Lock-out / Re-start Temperatures): • System cuts out in heating mode and automatically restarts at these temperatures.
[6]Heating at -4°F (Indoor // Outdoor) °F 70 DB, 60 WB // -4 DB, -5 WB

© 2026 Mitsubishi Electric Trane HVAC US LLC. All rights reserved.

INDOOR UNIT ACCESSORIES: MSZ-EX12NLS

Condensate	Blue Diamond MaxiBlue Condensate Pump with Reservoir Sensor 115-230V up to 48k BTU/h	X88-721
	Blue Diamond MaxiBlue Advanced Mini Condensate Pump w Reservoir Sensor 110V up to 48000 BTUH recommended	X87-711
	Drain Pan Level SensorControl	SS610E
	Refco Condensate Pump 100-240V up to 120k BTU/h	COMBI
	REFCO PUMP 100-240 VAC 506O HZ	X86-011
	Sauermann Condensate Pump 120-230V up to 60k BTU/h	SI30-230
	Blue Diamond MicroBlue Mini Condensate Pump 110208230V up to 18000 BTUH	X86-003
	Blue Diamond MegaBlue Condensate Pump with Reservoir Sensor 115-230V up to 170k BTU/h	X87-835
	Refco Condensate Pump 100-240 VAC	GOBI-II
	Blue Diamond Sensor Extension Cable 15 Ft	C13-103
Control Interface	Procon BACnet® and Modbus® Interface	PAC-UKPRC001-CN-1
	Airzone Wireless Lite Controller White	AZZBSLITERB
	IT Extender	PAC-WHS01IE-E
	kumo station® for Comfort app	PAC-WHS01HC-E
	Airzone Wireless Lite Controller Black	AZZBSLITERN
	Airzone Wired Blueface Controller Black	AZZBSBLUEZEROCN
	Airzone Wireless Think Controller Black	AZZBSTHINKRN
	M-NET adapter ²	MAC-334IF-E
	Wireless Interface 2 for Comfrot app	PAC-USWHS002-WF-2
	Airzone Wireless Think Controller White	AZZBSTHINKRB
	Airzone Wired Blueface Controller White	AZZBSBLUEZEROCB
	Thermostat Interface for 3rd Party Thermostats	PAC-US445CN-1
Disconnect Switch	30A600VUL fits 2 X 4 utility box - Black	TAZ-MS303
	30A600VUL fits 2 X 4 utility box - White	TAZ-MS303W
Drain Hose	Flexible Mini-Split Drain Hose	DRX-16
Filter	Microparticle Filter	MAC-EMF515FT-E
	Electro Static Anti-allergy Enzyme Filter	MAC-2320FT-E
Lineset	65 x 1/4 x 65 3/8 Lineset Twin-Tube Insulation	MLS143812T-65
	30 x 1/4 x 30 3/8 Lineset Twin-Tube Insulation	MLS143812T-30
	15 x 1/4 x 15 3/8 Lineset Twin-Tube Insulation	MLS143812T-15
	50 x 1/4 x 50 3/8 Lineset Twin-Tube Insulation	MLS143812T-50
Remote Sensor	Remote Temperature Sensor for MFZ MLZ and MSZ models	M21EAA307
	Wireless temperature and humidity sensor for Comfort app	PAC-USWHS003-TH-1
Terminal Signal Adapter	Backup Heat Relay Kit	CN24RELAY-KIT-CM3
Wired Remote Controller	Touch MA Remote Controller ¹	PAR-CT01MAU-SB
	Simple MA Remote Controller ¹	PAC-YT53CRAU-J
	Simple Direct Wired Remote Controller	PAC-SDW01RC-1
	Deluxe Wired MA Remote Controller ¹	PAR-42MAAUB
Wireless Remote Controller	Wireless RedLINK™ Remote Controller	MHK2
	Lockdown Bracket for Wireless Handheld Remote Controllers	RCMKP1CB

Notes

[1]Requires MAC-334IF-E Interface to connect MA controller
[2]Allows IDU Connection to MA Controller: *Deluxe MA Remote Controller *Simple MA Controller *Touch MA Controller

© 2026 Mitsubishi Electric Trane HVAC US LLC. All rights reserved.

OUTDOOR UNIT ACCESSORIES: SUZ-AA12NL

Air Outlet Guide	Air Outlet Guide	MAC-881SG-E
Centralized Drain Pan	Centralized Drain Pan	PAC-SG63DP-E
Control/Service Tool	M- & P-Series Maintenance Tool Cable Set	M21EC0397
	Maintenance Tool Interface	PAC-USCMS-MN-1
Drain Socket	Drain Socket	MAC-871DS
Hail Guards	Hail Guard	HG-B4
Mini-Split Wire	14 Gauge 4 wire Armored MiniSplit Cable50 ft roll	SW144-50
	14 Gauge 4 wire MiniSplit Cable50 ft roll	S144-50
	14 Gauge 4 wire MiniSplit Cable250 ft roll	S144-250
	14 Gauge 4 wire Armored MiniSplit Cable250 ft roll	SW144-250
Mounting Pad	Condensing Unit Mounting Pad 16 x 36 x 3	ULTRILITE1
Muffler	Muffler	MAC-001MF-E
Optional Defrost Heater	Base Heater	MAC-650BH-U
Port Adaptor	Adaptor 1/2 x 3/8	PAC-SK88RJ-E
Snow/Rain Diverter	SnowRain Diverter	SRD-1
Stand	Outdoor Unit 3-14 inch Mounting Base Pair - Plastic	DSD-400P
	Outdoor Unit Stand 12 High	QSMS1201M
	24 Single Fan Stand	QSMS2401M
	Condenser Wall Bracket	QSWB2000M-1
	Condenser Wall Bracket - Stainless Steel Finish	QSWBSS
	18 Single Fan Stand	QSMS1801M

Notes

© 2026 Mitsubishi Electric Trane HVAC US LLC. All rights reserved.

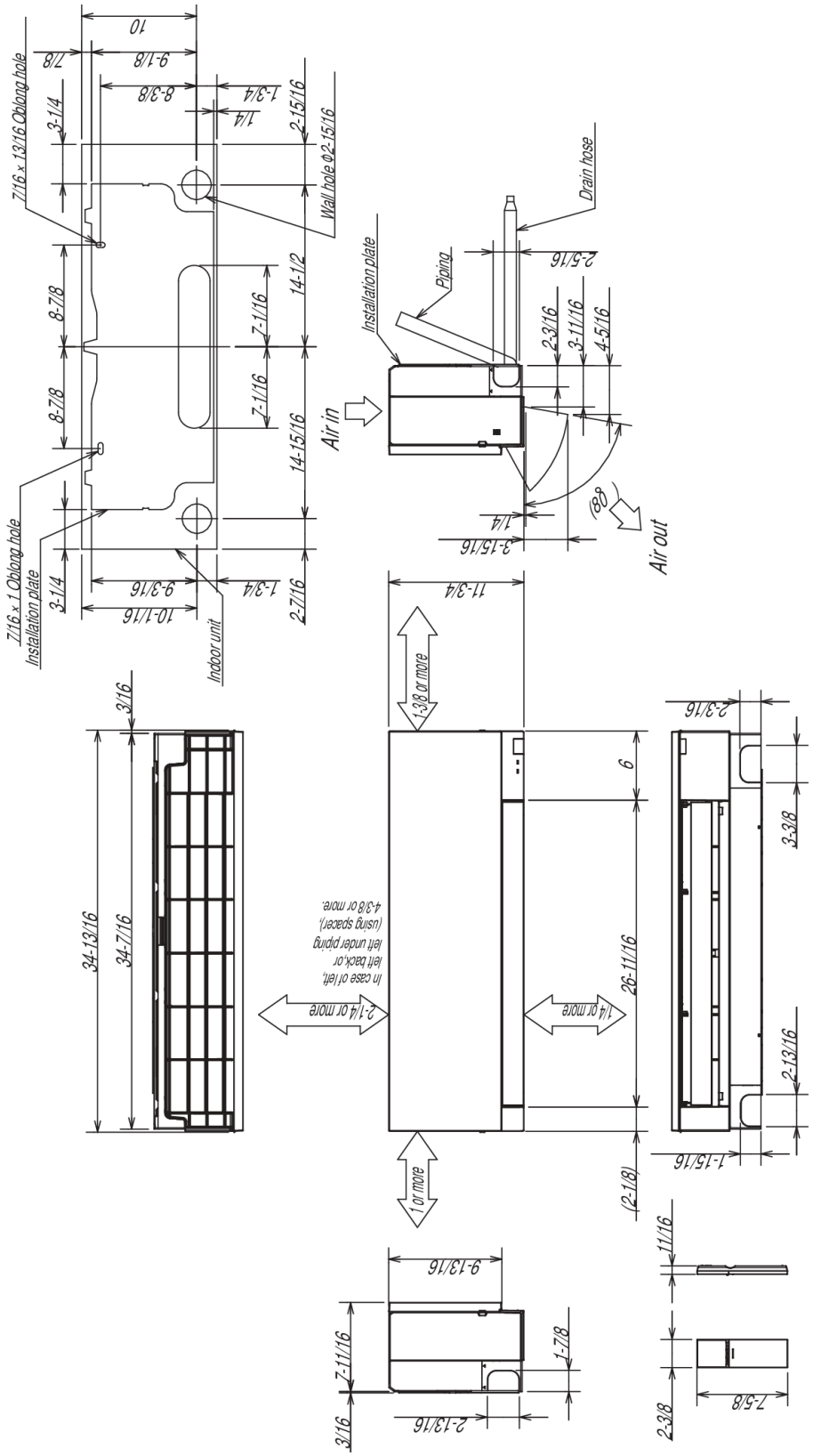

MSZ-EX15/18NL

Piping	Insulation	ϕ1-7/16 O.D
	Liquid line	ϕ1/4 - 19-11/16 (Flared connection ϕ1/4)
	Gas line	ϕ3/8 - 16-15/16 (Flared connection ϕ1/2)
Drain hose		Insulation ϕ1-1/8 Connected part ϕ5/8 O.D active length 15-3/8

Note: Extension pipe size refer to the specifications table.

MSZ-EX09/12NL

Piping	Insulation	ϕ1-7/16 O.D
	Liquid line	ϕ1/4 - 19-11/16 (Flared connection ϕ1/4)
	Gas line	ϕ3/8 - 16-15/16 (Flared connection ϕ3/8)
Drain hose		Insulation ϕ1-1/8 Connected part ϕ5/8 O.D active length 15-3/8

Note: Extension pipe size refer to the specifications table.

© 2026 Mitsubishi Electric Trane HVAC US LLC. All rights reserved.

OUTDOOR UNIT DIMENSIONS: SUZ-AA12NL

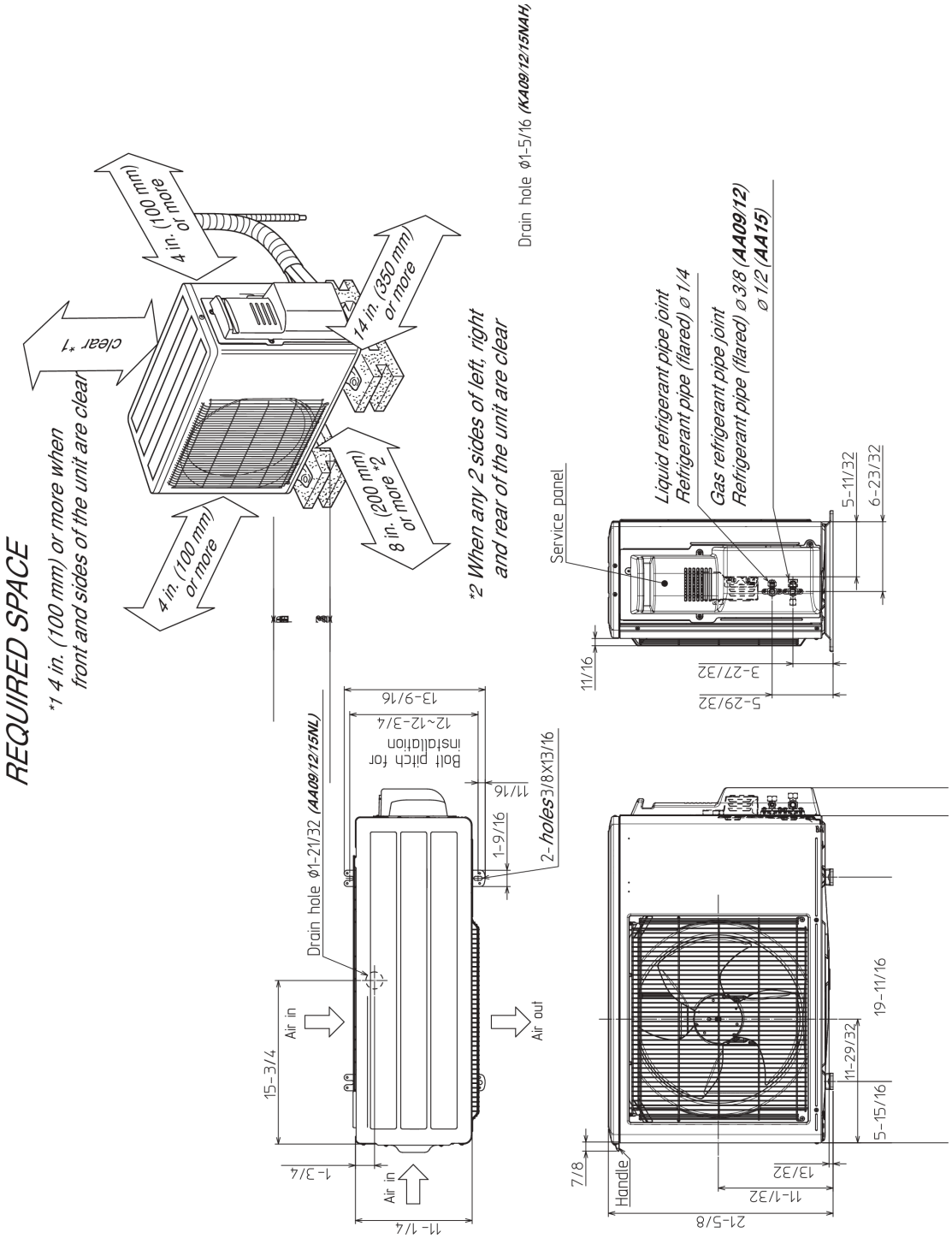

1340 Satellite Boulevard Suwanee, GA 30024
Toll Free: 800-433-4822 · mitsubishicomfort.com

METUS_2026-08_PROPIN

Specifications are subject to change without notice.

© 2026 Mitsubishi Electric Trane HVAC US LLC. All rights reserved.