MSZ-EX09NL2S & SUZ-AA09NLHZ
9,000 BTU/H WALL-MOUNTED INDOOR UNIT
9,000 BTU/H HYPER HEAT PUMP OUTDOOR UNIT

Job Name:			
System Reference:		**Date:**	

INDOOR Unit ... MSZ-EX09NL2S

OUTDOOR Unit ... SUZ-AA09NLHZ

INDOOR UNIT FEATURES

- Wi-Fi Built-in: Wi-Fi enabled units pair with the Comfort app for complete control over temperature, fan speeds, modes, schedules, and more.
- Econo Cool: Econo Cool is feature that temporarily adjusts the airflow to maintain comfort while using less energy.
- Swing Mode: An indoor unit with this capability can move air throughout the room like an oscillating fan.
- Smart Set: Smart Set conveniently adjusts to the preferred preset temperature by pressing a single button on the remote control.
- Dual Barrier Coating: Dual Barrier Coating reduces the collection of contaminants like dust, fibers, smoke, and oil on the inner surface of the indoor unit.
- Quiet: Outdoor units are as quiet as a typical conversation, and most indoor units are whisper quiet.
- Electrostatic Enzyme Filter (Built-In): Charged with static electricity, the Electrostatic filter is designed to attract and filter charged particles which can include airborne non-living particulates.

OUTDOOR UNIT FEATURES

- H2i® Hyper-Heating: 100% heating capacity down to 5° F .
- Inverter Driven Compressor: Inverter technology uses only the precise amount of energy needed to keep a space comfortable.
- Blue Fin Coating: Anti-corrosion coating that protects the outdoor heat exchanger against salt, sulfur, and other airborne contaminants that impact the efficiency and performance of the outdoor units.
- Base Pan Heater: This advanced base pan heater helps to prevent interrupted operation due to water freezing after a defrost cycle, ensuring your warmth and comfort during colder weather.
- Seacoast Protection: An anti-corrosion treatment applied to the aluminum fins of the heat exchanger of the outdoor unit to protect against corrosion caused by salt, sulfur, and other airborne contaminants, especially in coastal and industrial areas.

© 2026 Mitsubishi Electric Trane HVAC US LLC. All rights reserved.

SPECIFICATIONS: MSZ-EX09NL2S & SUZ-AA09NLHZ

Cooling at 95F[1]	Maximum Capacity	Btu/h	9000
	Rated Capacity	Btu/h	9000
	Minimum Capacity	Btu/h	4800
	Maximum Power Input	W	710
	Rated Power Input	W	710
	Moisture Removal	Pints/h	0.30
	Sensible Heat Factor		0.96
	Power Factor [208V / 230V]	%	91 / 91
Heating at 47F[2]	Maximum Capacity	Btu/h	15000
	Rated Capacity	Btu/h	12000
	Minimum Capacity	Btu/h	8300
	Maximum Power Input	W	1160
	Rated Power Input	W	900
	Power Factor [208V / 230V]	%	94 / 94
Heating at 17F[3]	Maximum Capacity	Btu/h	12000
	Rated Capacity	Btu/h	7300
	Maximum Power Input	W	1250
	Rated Power Input	W	860
Heating at 5F[5]	Maximum Capacity	Btu/h	12000
	Maximum Power Input	W	1758
Heating at -13F[9]	Maximum Capacity	Btu/h	7300
Efficiency	SEER2		17.40
	EER2[1]		12.60
	HSPF2 [IV]		10
	COP at 47°F[2]		3.90
	COP at 17°F at Maximum Capacity[3]		2.80
	COP at 5°F at Maximum Capacity[5]		2.00
	COP at -13°F at Maximum Capacity[9]		1.87
	ENERGY STAR® Certified		Yes
Electrical	Voltage, Phase, Frequency	V AC / V AC , ø , Hz	208 / 230 , 1 , 60
	Guaranteed Voltage Range	V AC	198 - 253
	Voltage: Indoor - Outdoor, S1-S2	V AC	208/230
	Voltage: Indoor - Outdoor, S2-S3	V DC	12-24
	Short-circuit Current Rating [SCCR]	kA	5
	Recommended Fuse/Breaker Size (Outdoor)	A	25
	Recommended Wire Size [Indoor - Outdoor]	AWG	14
Indoor Unit	Fan Motor Output	W	30
	Fan Motor Type		DC Motor
	Airflow Rate at Cooling, Dry	CFM	143 , 164 , 228 , 305 , 391
	Airflow Rate at Cooling, Wet	CFM	128 , 147 , 205 , 274 , 352
	Airflow Rate at Heating, Dry	CFM	143 , 164 , 205 , 244 , 448
	Sound Pressure Level [Cooling]	dB (A)	21 , 23 , 29 , 36 , 42
	Sound Pressure Level [Heating]	dB (A)	21 , 24 , 29 , 37 , 45
	Drain Pipe Size O.D.	inch [mm]	5/8 [16]
	Dual Barrier Coating on Heat Exchanger		Yes
	Dual Barrier Coating on Fan		Yes
	External Finish Color		3.1PB 8.2/0.2
	Unit Dimensions (W x D x H)	inch x inch x inch [mm x mm x mm]	34-13/16 x 7-11/16 x 11-3/4 [885 x 195 x 299]
	Package Dimensions (W x D x H)	inch x inch x inch [mm x mm x mm]	35-5/8 x 14-3/16 x 10-11/16 [980 x 360 x 270]
	Unit Weight	lbs [kg]	26 [11.50]
	Package Weight	lbs [kg]	29 [13]
IDU Operating Temp. Range	Cooling Intake Air Temp [Maximum / Minimum]	°FDB , °FWB / °FDB , °FWB	90 , 73 / 66 , 59
	Heating Intake Air Temp [Maximum / Minimum]	°FDB	83 / 50
Outdoor Unit	MCA	A	24
	MOCP	A	41

Notes

[1]Cooling at 95°F (Indoor // Outdoor) °F 80 DB, 67 WB // 95 DB, 75 WB
[2]Heating at 47°F (Indoor // Outdoor) °F 70 DB, 60 WB // 47 DB, 43 WB
[3]Heating at 17°F (Indoor // Outdoor) °F 70 DB, 60 WB // 17 DB, 15 WB
[5]Heating at 5°F (Indoor // Outdoor) °F 70 DB, 60 WB // 5 DB, 4 WB
[9]Heating at -13°F (Indoor // Outdoor) °F 70 DB, 60 WB // -13 DB, -14 WB
[*]Indoor/Outdoor Unit Operating Temperature Range (Cooling Air Temp [Maximum / Minimum]): • Applications should be restricted to comfort cooling only; equipment cooling applications are not recommended for low ambient temperature conditions.
[**]Outdoor Unit Operating Temperature Range (Cooling Thermal Lock-out / Re-start Temperatures; Heating Thermal Lock-out / Re-start Temperatures): • System cuts out in heating mode and automatically restarts at these temperatures.

© 2026 Mitsubishi Electric Trane HVAC US LLC. All rights reserved.

Outdoor Unit	Fan Motor Output	W	50
	Airflow Rate Cooling	CFM	2193
	Airflow Rate Heating	CFM	1949
	Defrost Method		Reverse Cycle
	Coating on Heat Exchanger (Bluefin, Sea Coast)		Yes , Yes
	Sound Pressure Level, Cooling[1]	dB (A)	54
	Sound Pressure Level, Heating[2]	dB (A)	55
	Compressor Type		Twin Rotary
	Compressor Model		SRB172FQHMT
	Compressor Oil [Type // Charge]	// oz	RM68EH // 14.5
	External Finish Color		Munsell No.3Y 7.8/1.1
	Base Pan Heater		Built-in
	Unit Dimensions (W x D x H)	inch x inch x inch [mm x mm x mm]	33-1/16 x 13 x 34-5/8 [840 x 330 x 880]
	Package Dimensions (W x D x H)	inch x inch x inch [mm x mm x mm]	38-5/8 x 16-9/16 x 39 [980 x 420 x 990]
	Unit Weight	lbs [kg]	115 [52.16]
	Package Weight	lbs [kg]	133 [60.33]
ODU Operating Temp. Range	Cooling Intake Air Temp [Maximum / Minimum*]	°FDB	115 / 14
	Cooling Thermal Lock-out / Re-start Temperatures**	°FDB	-1 / 3
	Heating Intake Air Temp [Maximum / Minimum]	°FDB , °FWB / °FDB , °FWB	70 , 65 / -13 , -14
	Heating Thermal Lock-out / Re-start Temperatures**	°FDB	-22.5 / -14
Refrigerant	Type		R454B
	Pre-Charged Refrigerant Amount	lbs , oz	3 ,
	Maximum Pre-Charged Piping Length	ft [m]	25 [7.60]
	Additional Refrigerant Charge Per Additional Piping Length	oz/ft	0.22
Piping	Gas Pipe Size O.D. [Flared]	inch [mm]	3/8 [9.52]
	Liquid Pipe Size O.D. [Flared]	inch [mm]	1/4 [6.35]
	Maximum Piping Length	ft [m]	100 [30]
	Maximum Height Difference	ft [m]	50 [15]
	Maximum Number of Bends		10

Notes

[1]Cooling at 95°F (Indoor // Outdoor) °F 80 DB, 67 WB // 95 DB, 75 WB
[2]Heating at 47°F (Indoor // Outdoor) °F 70 DB, 60 WB // 47 DB, 43 WB
[3]Heating at 17°F (Indoor // Outdoor) °F 70 DB, 60 WB // 17 DB, 15 WB
[5]Heating at 5°F (Indoor // Outdoor) °F 70 DB, 60 WB // 5 DB, 4 WB
[9]Heating at -13°F (Indoor // Outdoor) °F 70 DB, 60 WB // -13 DB, -14 WB
*Indoor/Outdoor Unit Operating Temperature Range (Cooling Air Temp [Maximum / Minimum]): • Applications should be restricted to comfort cooling only; equipment cooling applications are not recommended for low ambient temperature conditions.
**Outdoor Unit Operating Temperature Range (Cooling Thermal Lock-out / Re-start Temperatures; Heating Thermal Lock-out / Re-start Temperatures): • System cuts out in heating mode and automatically restarts at these temperatures.

© 2026 Mitsubishi Electric Trane HVAC US LLC. All rights reserved.

INDOOR UNIT ACCESSORIES: MSZ-EX09NL2S

Condensate	Sauermann Condensate Pump	SI30-230
	Drain Pan Level SensorControl	SS610E
	Refco Condensate Pump 100-240 VAC up to 120000 BTUH	COMBI
	Refco Condensate Pump 100-240 VAC	GOBI-II
	Blue Diamond Sensor Extension Cable 15 Ft	C13-103
	Blue Diamond MicroBlue Mini Condensate Pump 110208230V up to 18000 BTUH	X86-003
	Blue Diamond Advanced Mini Condensate Pump w Reservoir Sensor 208230V recommended	X88-721
	Blue Diamond MaxiBlue Advanced Mini Condensate Pump w Reservoir Sensor 110V up to 48000 BTUH recommended	X87-711
	REFCO PUMP 100-240 VAC 506O HZ	X86-011
	Blue Diamond MegaBlue Advanced Condensate Pump w Reservoir Sensor	X87-835
Control Interface	Thermostat Interface for 3rd Party Thermostats	PAC-US445CN-1
	Airzone Wireless Think Controller White	AZZBSTHINKRB
	kumo station for the Comfort app	PAC-WHS01HC-E
	Airzone Wireless Lite Controller Black	AZZBSLITERN
	Wireless Interface Adapter for the Comfort app	PAC-USWHS002-WF-2
	Airzone Wireless Lite Controller White	AZZBSLITERB
	M-NET adapter ²	MAC-334IF-E
	Procon BACnet and Modbus Interface	PAC-UKPRC001-CN-1
	Airzone Wireless Think Controller Black	AZZBSTHINKRN
	IT Extender for kumo station	PAC-WHS01IE-E
	Airzone Wired Blueface Controller Black	AZZBSBLUEZEROCN
	Airzone Wired Blueface Controller White	AZZBSBLUEZEROCB
Disconnect Switch	30A600VUL fits 2 X 4 utility box - White	TAZ-MS303W
	30A600VUL fits 2 X 4 utility box - Black	TAZ-MS303
Drain Hose	Flexible Mini-Split Drain Hose	DRX-16
Filter	Microparticle Filter	MAC-EMF515FT-E
	Electro Static Anti-allergy Enzyme Filter	MAC-2320FT-E
Lineset	50 x 1/4 x 50 3/8 Lineset Twin-Tube Insulation	MLS143812T-50
	30 x 1/4 x 30 3/8 Lineset Twin-Tube Insulation	MLS143812T-30
	65 x 1/4 x 65 3/8 Lineset Twin-Tube Insulation	MLS143812T-65
	15 x 1/4 x 15 3/8 Lineset Twin-Tube Insulation	MLS143812T-15
Remote Sensor	Remote Temperature Sensor for MFZ MLZ and MSZ models	M21EAA307
	Wireless temperature and humidity sensor for the Comfort app	PAC-USWHS003-TH-1
Terminal Signal Adapter	Backup Heat Relay Kit Adapter for CN24 or CN152 Connector	CN24RELAY-KIT-CM3
Wired Remote Controller	Deluxe Wired MA Remote Controller ¹	PAR-42MAAUB
	Simple Direct Wired Remote Controller	PAC-SDW01RC-1
	Simple MA Remote Controller ¹	PAC-YT53CRAU-J
	Touch MA Wired Remote Controller ¹	PAR-CT01MAU-SB
Wireless Remote Controller	RedLINK Wireless Remote Controller	MHK2
	Lockdown Bracket for Wireless Handheld Remote Controllers	RCMKP1CB

Notes

[2]Allows IDU Connection to MA Controller: *Deluxe MA Remote Controller *Simple MA Controller *Touch MA Controller
[1]Requires MAC-334IF-E Interface to connect MA controller

© 2026 Mitsubishi Electric Trane HVAC US LLC. All rights reserved.

OUTDOOR UNIT ACCESSORIES: SUZ-AA09NLHZ

Air Outlet Guide	Air Outlet Guide	☐ MAC-890SG-E
Control/Service Tool	Maintenance Tool Interface	☐ PAC-USCMS-MN-1
	M- & P-Series Maintenance Tool Cable Set	☐ M21EC0397
Drain Socket	Drain Socket	☐ MAC-871DS
Hail Guards	Hail Guard	☐ HG-A7
Mini-Split Wire	14 Gauge 4 wire Armored MiniSplit Cable250 ft roll	☐ SW144-250
	14 Gauge 4 wire MiniSplit Cable250 ft roll	☐ S144-250
	14 Gauge 4 wire MiniSplit Cable50 ft roll	☐ S144-50
	14 Gauge 4 wire Armored MiniSplit Cable50 ft roll	☐ SW144-50
Mounting Pad	Condensing Unit Mounting Pad 16 x 36 x 3	☐ ULTRILITE1
Muffler	Muffler	☐ MAC-001MF-E
Snow/Rain Diverter	SnowRain Diverter	☐ SRD-3
Stand	Outdoor Unit 3-14 inch Mounting Base Pair - Plastic	☐ DSD-400P
	Condenser Wall Bracket - Stainless Steel Finish	☐ QSWBSS
	24 Single Fan Stand	☐ QSMS2401M
	18 Single Fan Stand	☐ QSMS1801M
	Outdoor Unit Stand 12 High	☐ QSMS1201M
	Condenser Wall Bracket	☐ QSWB2000M-1
Notes		

© 2026 Mitsubishi Electric Trane HVAC US LLC. All rights reserved.

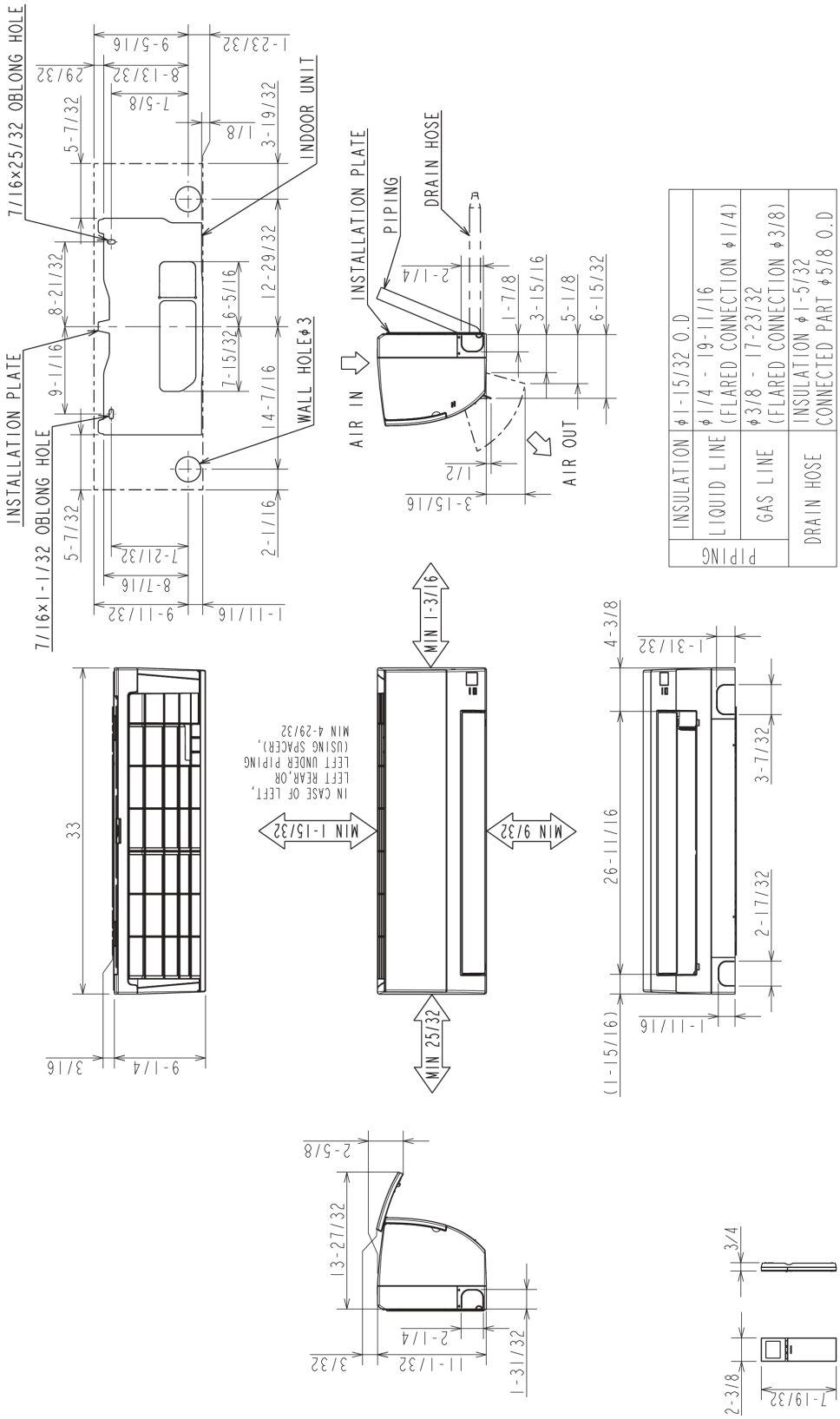

MSZ-HX09NL2-U1
MSZ-HX12NL2-U1

© 2026 Mitsubishi Electric Trane HVAC US LLC. All rights reserved.

OUTDOOR UNIT DIMENSIONS: SUZ-AA09NLHZ

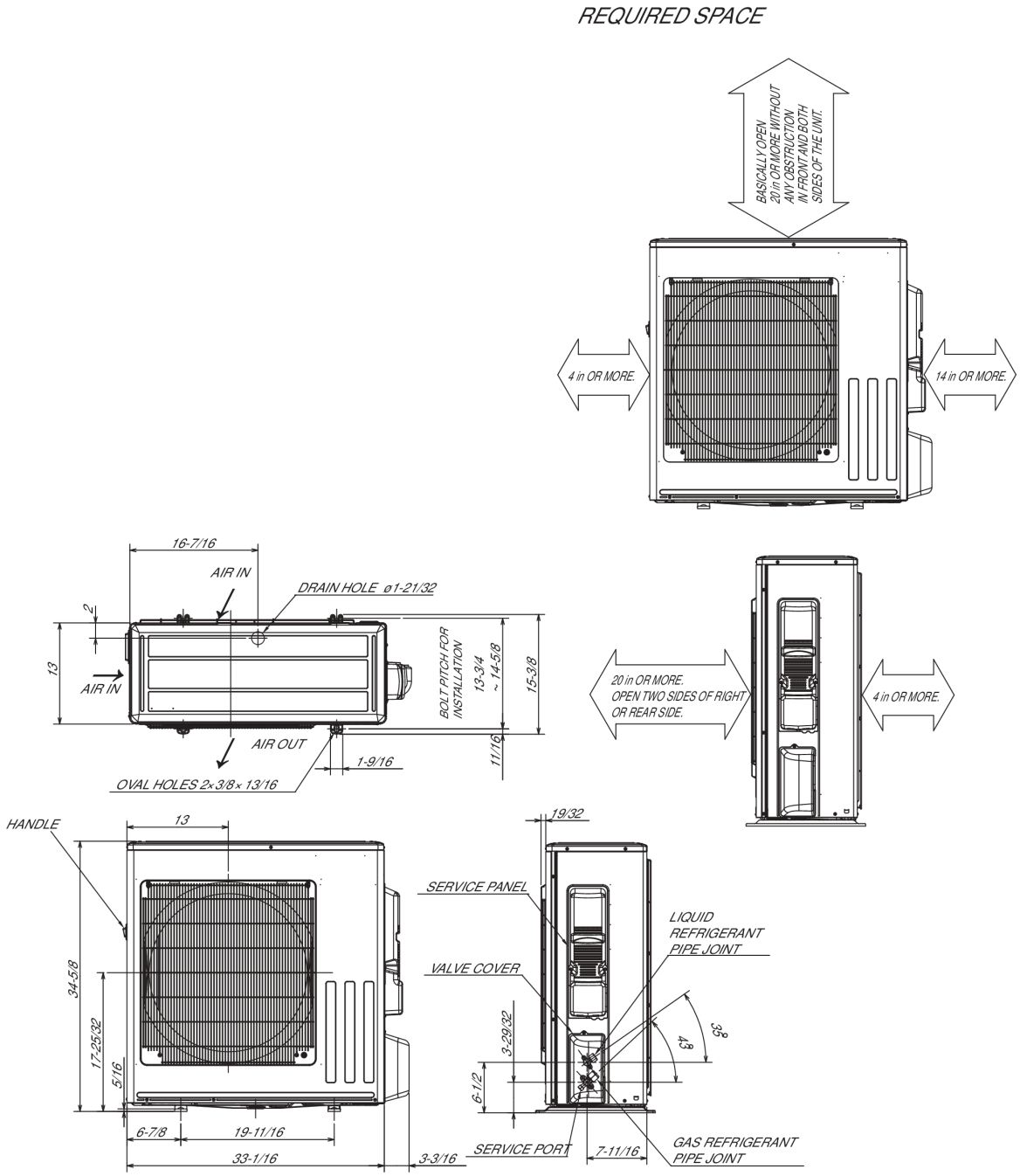

REFRIGERANT PIPE JOINT	LIQUID REFRIGERANT PIPE	FLARED ø6.35 (1/4")
	GAS REFRIGERANT PIPE	AA09/12 : FLARED ø9.52 (3/8") AA15/18 : FLARED ø12.7 (1/2") AA24/30/36 : FLARED ø15.88 (5/8")

1340 Satellite Boulevard Suwanee, GA 30024
Toll Free: 800-433-4822 · mitsubishicomfort.com

METUS_2026-07_PROPIN

Specifications are subject to change without notice.
© 2026 Mitsubishi Electric Trane HVAC US LLC. All rights reserved.