# MLZ-KX18NL & SUZ-AA18NLHZ
## 16,400 BTU/H CEILING-MOUNTED INDOOR UNIT
## 16,400 BTU/H HYPER HEAT PUMP OUTDOOR UNIT

| | | | |
|---|---|---|---|
| **Job Name:** | | | |
| **System Reference:** | | **Date:** | |

INDOOR Unit ... MLZ-KX18NL

OUTDOOR Unit ... SUZ-AA18NLHZ

### INDOOR UNIT FEATURES

- Wi-Fi Included: A factory-supplied Wireless Interface Adapter is included with the indoor unit for field installation.
- Dual Barrier Coating: Dual Barrier Coating reduces the collection of contaminants like dust, fibers, smoke, and oil on the inner surface of the indoor unit.
- Smart Set: Smart Set conveniently adjusts to the preferred preset temperature by pressing a single button on the remote control.
- Auto Vane Control: Auto Vane Control directs outlet vanes to move left, right, up, and down. This airflow control provides even temperatures throughout a space.
- Econo Cool: Econo Cool is feature that temporarily adjusts the airflow to maintain comfort while using less energy.

### OUTDOOR UNIT FEATURES

- H2i® Hyper-Heating: 100% heating capacity down to 5° F .
- Inverter Driven Compressor: Inverter technology uses only the precise amount of energy needed to keep a space comfortable.
- Blue Fin Coating: Anti-corrosion coating that protects the outdoor heat exchanger against salt, sulfur, and other airborne contaminants that impact the efficiency and performance of the outdoor units.
- Base Pan Heater: This advanced base pan heater helps to prevent interrupted operation due to water freezing after a defrost cycle, ensuring your warmth and comfort during colder weather.
- Seacoast Protection: An anti-corrosion treatment applied to the aluminum fins of the heat exchanger of the outdoor unit to protect against corrosion caused by salt, sulfur, and other airborne contaminants, especially in coastal and industrial areas.


© 2026 Mitsubishi Electric Trane HVAC US LLC. All rights reserved.

# SPECIFICATIONS: MLZ-KX18NL & SUZ-AA18NLHZ

| | | | |
|---|---|---|---|
| Cooling at 95F[1] | Maximum Capacity | Btu/h | 16400 |
| | Rated Capacity | Btu/h | 16400 |
| | Minimum Capacity | Btu/h | 5200 |
| | Maximum Power Input | W | 1390 |
| | Rated Power Input | W | 1390 |
| | Moisture Removal | Pints/h | 4.20 |
| | Sensible Heat Factor | | 0.71 |
| | Power Factor [208V / 230V] | % | 98 / 98 |
| Heating at 47F[2] | Maximum Capacity | Btu/h | 21000 |
| | Rated Capacity | Btu/h | 18400 |
| | Minimum Capacity | Btu/h | 8100 |
| | Maximum Power Input | W | 2080 |
| | Rated Power Input | W | 1620 |
| | Power Factor [208V / 230V] | % | 98 / 98 |
| Heating at 17F[3] | Maximum Capacity | Btu/h | 18400 |
| | Rated Capacity | Btu/h | 12000 |
| | Maximum Power Input | W | 2750 |
| | Rated Power Input | W | 1410 |
| Heating at 5F[5] | Maximum Capacity | Btu/h | 18400 |
| | Maximum Power Input | W | 2696 |
| Heating at -13F[9] | Maximum Capacity | Btu/h | 11100 |
| Efficiency | SEER2 | | 17.20 |
| | EER2[1] | | 11.70 |
| | HSPF2 [IV] | | 9.50 |
| | COP at 47°F[2] | | 3.30 |
| | COP at 17°F at Maximum Capacity[3] | | 1.90 |
| | COP at 5°F at Maximum Capacity[5] | | 2.00 |
| | COP at -13°F at Maximum Capacity[9] | | 1.33 |
| | ENERGY STAR® Certified | | Yes |
| Electrical | Voltage, Phase, Frequency | V AC / V AC , ø , Hz | 208 / 230 , 1 , 60 |
| | Guaranteed Voltage Range | V AC | 198 - 253 |
| | Voltage: Indoor - Outdoor, S1-S2 | V AC | 208/230 |
| | Voltage: Indoor - Outdoor, S2-S3 | V DC | 12-24 |
| | Short-circuit Current Rating [SCCR] | kA | 5 |
| | Recommended Fuse/Breaker Size (Outdoor) | A | 30 |
| | Recommended Wire Size [Indoor - Outdoor] | AWG | 14 |
| Indoor Unit | MCA | A | 1 |
| | Fan Motor Output | W | 30 |
| | Fan Motor Type | | DC Motor |
| | Airflow Rate at Cooling, Dry | CFM | 212 , 293 , 346 , 403 |
| | Airflow Rate at Heating, Dry | CFM | 212 , 311 , 364 , 417 |
| | Sound Pressure Level [Cooling] | dB (A) | 29 , 36 , 41 , 47 |
| | Sound Pressure Level [Heating] | dB (A) | 26 , 37 , 42 , 48 |
| | Drain Pipe Size O.D. | inch [ mm ] | 1-1/16 [ 26 ] |
| | Condensate Lift Mechanism, Max Height | inch [ mm ] | 19-11/16 [ 500 ] |
| | Dual Barrier Coating on Fan | | Yes |
| | Unit Dimensions (W x D x H) | inch x inch x inch [ mm x mm x mm ] | 43-3/8 x 14-3/16 x 7-5/16 [ 1102 x 360 x 185 ] |
| | Package Dimensions (W x D x H) | inch x inch x inch [ mm x mm x mm ] | 46-3/8 x 11-3/16 x 15-3/4 [ 1177 x 284 x 400 ] |
| | Unit Weight | lbs [ kg ] | 34 [ 15.50 ] |
| | Package Weight | lbs [ kg ] | 42 [ 19 ] |
| IDU Operating Temp. Range | Cooling Intake Air Temp [Maximum / Minimum] | °FDB , °FWB / °FDB , °FWB | 90 , 73 / 66 , 59 |
| | Heating Intake Air Temp [Maximum / Minimum] | °FDB | 83 / 50 |
| Outdoor Unit | MCA | A | 25 |
| | MOCP | A | 42 |
| | Fan Motor Output | W | 50 |

**Notes**

[1]Cooling at 95°F (Indoor // Outdoor) °F 80 DB, 67 WB // 95 DB, 75 WB
[2]Heating at 47°F (Indoor // Outdoor) °F 70 DB, 60 WB // 47 DB, 43 WB
[3]Heating at 17°F (Indoor // Outdoor) °F 70 DB, 60 WB // 17 DB, 15 WB
[5]Heating at 5°F (Indoor // Outdoor) °F 70 DB, 60 WB // 5 DB, 4 WB
[9]Heating at -13°F (Indoor // Outdoor) °F 70 DB, 60 WB // -13 DB, -14 WB
[*]Indoor/Outdoor Unit Operating Temperature Range (Cooling Air Temp [Maximum / Minimum]): • Applications should be restricted to comfort cooling only; equipment cooling applications are not recommended for low ambient temperature conditions.
[**]Outdoor Unit Operating Temperature Range (Cooling Thermal Lock-out / Re-start Temperatures; Heating Thermal Lock-out / Re-start Temperatures): • System cuts out in heating mode and automatically restarts at these temperatures.


© 2026 Mitsubishi Electric Trane HVAC US LLC. All rights reserved.

| | | | |
|---|---|---|---|
| Outdoor Unit | Airflow Rate Cooling | CFM | 2193 |
| | Airflow Rate Heating | CFM | 1949 |
| | Defrost Method | | Reverse Cycle |
| | Coating on Heat Exchanger (Bluefin, Sea Coast) | | Yes , Yes |
| | Sound Pressure Level, Cooling[1] | dB (A) | 54 |
| | Sound Pressure Level, Heating[2] | dB (A) | 55 |
| | Compressor Type | | Twin Rotary |
| | Compressor Model | | SRB172FQHMT |
| | Compressor Oil [Type // Charge] | // oz | RM68EH // 14.5 |
| | External Finish Color | | Munsell No.3Y 7.8/1.1 |
| | Base Pan Heater | | Built-in |
| | Unit Dimensions (W x D x H) | inch x inch x inch [ mm x mm x mm ] | 33-1/16 x 13 x 34-5/8 [ 840 x 330 x 880 ] |
| | Package Dimensions (W x D x H) | inch x inch x inch [ mm x mm x mm ] | 38-5/8 x 16-9/16 x 39 [ 980 x 420 x 990 ] |
| | Unit Weight | lbs [ kg ] | 115 [ 52.2 ] |
| | Package Weight | lbs [ kg ] | 133 [ 60.3 ] |
| ODU Operating Temp. Range | Cooling Intake Air Temp [Maximum / Minimum*] | °FDB | 115 / 14 |
| | Cooling Thermal Lock-out / Re-start Temperatures** | °FDB | -1 / 3 |
| | Heating Intake Air Temp [Maximum / Minimum] | °FDB , °FWB / °FDB , °FWB | 75 , 65 / -13 , -14 |
| | Heating Thermal Lock-out / Re-start Temperatures** | °FDB | -22.5 / -14 |
| Refrigerant | Type | | R454B |
| | Pre-Charged Refrigerant Amount | lbs | 3 |
| | Maximum Pre-Charged Piping Length | ft [ m ] | 25 [ 7.60 ] |
| | Additional Refrigerant Charge Per Additional Piping Length | oz/ft | 0.22 |
| Piping | Liquid Pipe Size O.D. [Flared] | inch [ mm ] | 1/4 [ 6.35 ] |
| | Gas Pipe Size O.D. [Flared] | inch [ mm ] | 1/2 [ 12.72 ] |
| | Maximum Piping Length | ft [ m ] | 100 [ 30 ] |
| | Maximum Height Difference | ft [ m ] | 50 [ 15 ] |
| | Maximum Number of Bends | | 10 |

**Notes**

[1]Cooling at 95°F (Indoor // Outdoor) °F 80 DB, 67 WB // 95 DB, 75 WB
[2]Heating at 47°F (Indoor // Outdoor) °F 70 DB, 60 WB // 47 DB, 43 WB
[3]Heating at 17°F (Indoor // Outdoor) °F 70 DB, 60 WB // 17 DB, 15 WB
[5]Heating at 5°F (Indoor // Outdoor) °F 70 DB, 60 WB // 5 DB, 4 WB
[9]Heating at -13°F (Indoor // Outdoor) °F 70 DB, 60 WB // -13 DB, -14 WB
[*]Indoor/Outdoor Unit Operating Temperature Range (Cooling Air Temp [Maximum / Minimum]): • Applications should be restricted to comfort cooling only; equipment cooling applications are not recommended for low ambient temperature conditions.
[**]Outdoor Unit Operating Temperature Range (Cooling Thermal Lock-out / Re-start Temperatures; Heating Thermal Lock-out / Re-start Temperatures): • System cuts out in heating mode and automatically restarts at these temperatures.


© 2026 Mitsubishi Electric Trane HVAC US LLC. All rights reserved.

# INDOOR UNIT ACCESSORIES: MLZ-KX18NL

| | | | |
|---|---|---|---|
| Condensate | Blue Diamond MegaBlue Condensate Pump with Reservoir Sensor 115-230V up to 170k BTU/h | ☐ | X87-835 |
| | Blue Diamond MaxiBlue Condensate Pump with Reservoir Sensor 115-230V up to 48k BTU/h | ☐ | X88-721 |
| | Blue Diamond MaxiBlue Advanced Mini Condensate Pump w Reservoir Sensor 110V up to 48000 BTUH recommended | ☐ | X87-711 |
| | Sauermann Condensate Pump 120-230V up to 60k BTU/h | ☐ | SI30-230 |
| | Blue Diamond Sensor Extension Cable 15 Ft | ☐ | C13-103 |
| | Blue Diamond MicroBlue Mini Condensate Pump 110208230V up to 18000 BTUH | ☐ | X86-003 |
| | Refco Condensate Pump 100-240V up to 120k BTU/h | ☐ | COMBI |
| Control Interface | Airzone Wired Blueface Controller White | ☐ | AZZBSBLUEZEROCB |
| | Airzone Wireless Lite Controller Black | ☐ | AZZBSLITERN |
| | Airzone Wireless Lite Controller White | ☐ | AZZBSLITERB |
| | Airzone Wireless Think Controller White | ☐ | AZZBSTHINKRB |
| | Wireless Interface 2 for Comfrot app | ☐ | PAC-USWHS002-WF-2 |
| | Thermostat Interface for 3rd Party Thermostats | ☐ | PAC-US445CN-1 |
| | kumo station® for Comfort app | ☐ | PAC-WHS01HC-E |
| | Airzone Wireless Think Controller Black | ☐ | AZZBSTHINKRN |
| | M-NET adapter <sup>2</sup> | ☐ | MAC-334IF-E |
| | IT Extender | ☐ | PAC-WHS01IE-E |
| | Procon BACnet® and Modbus® Interface | ☐ | PAC-UKPRC001-CN-1 |
| | Airzone Wired Blueface Controller Black | ☐ | AZZBSBLUEZEROCN |
| Disconnect Switch | 30A600VUL fits 2 X 4 utility box - White | ☐ | TAZ-MS303W |
| | 30A600VUL fits 2 X 4 utility box - Black | ☐ | TAZ-MS303 |
| Drain Hose | Flexible Mini-Split Drain Hose | ☐ | DRX-16 |
| Filter | Microparticle Filter | ☐ | MAC-EMF515FT-E |
| | Anti-allergy Enzyme Filter | ☐ | MAC-408FT-E |
| Grille | Grille (Decoration panel) | ☑ | MLP-449WU-U1 |
| Lineset | 1/4 x 1/2 Lineset Twin-Tube Insulation - 100 feet | ☐ | MLS141212T-100 |
| | 1/4 x 1/2 Lineset Twin-Tube Insulation - 65 feet | ☐ | MLS141212T-65 |
| | 1/4 x 1/2 Lineset Twin-Tube Insulation - 50 feet | ☐ | MLS141212T-50 |
| | 1/4 x 1/2 Lineset Twin-Tube Insulation - 15 feet | ☐ | MLS141212T-15 |
| | 1/4 x 1/2 Lineset Twin-Tube Insulation - 30 feet | ☐ | MLS141212T-30 |
| Remote Sensor | Remote Temperature Sensor for MFZ MLZ and MSZ models | ☐ | M21EAA307 |
| | Wireless temperature and humidity sensor for Comfort app | ☐ | PAC-USWHS003-TH-1 |
| Terminal Signal Adapter | Backup Heat Relay Kit | ☐ | CN24RELAY-KIT-CM3 |
| Wired Remote Controller | Simple Direct Wired Remote Controller | ☐ | PAC-SDW01RC-1 |
| | Deluxe Wired MA Remote Controller <sup>1</sup> | ☐ | PAR-42MAAUB |
| | Simple MA Remote Controller <sup>1</sup> | ☐ | PAC-YT53CRAU-J |
| | Touch MA Remote Controller <sup>1</sup> | ☐ | PAR-CT01MAU-SB |
| Wireless Remote Controller | Lockdown Bracket for Wireless Handheld Remote Controllers | ☐ | RCMKP1CB |
| | Wireless RedLINK™ Remote Controller | ☐ | MHK2 |

**Notes**

[2]Allows IDU Connection to MA Controller: *Deluxe MA Remote Controller *Simple MA Controller *Touch MA Controller
[1]Requires MAC-334IF-E Interface to connect MA controller


© 2026 Mitsubishi Electric Trane HVAC US LLC. All rights reserved.

# OUTDOOR UNIT ACCESSORIES: SUZ-AA18NLHZ

| | | |
|---|---|---|
| Air Outlet Guide | Air Outlet Guide | ☐ MAC-890SG-E |
| Control/Service Tool | Maintenance Tool Interface | ☐ PAC-USCMS-MN-1 |
| | M- & P-Series Maintenance Tool Cable Set | ☐ M21EC0397 |
| Drain Socket | Drain Socket | ☐ MAC-871DS |
| Hail Guards | Hail Guard | ☐ HG-A7 |
| Mini-Split Wire | 14 Gauge 4 wire Armored MiniSplit Cable50 ft roll | ☐ SW144-50 |
| | 14 Gauge 4 wire MiniSplit Cable250 ft roll | ☐ S144-250 |
| | 14 Gauge 4 wire MiniSplit Cable50 ft roll | ☐ S144-50 |
| | 14 Gauge 4 wire Armored MiniSplit Cable250 ft roll | ☐ SW144-250 |
| Mounting Pad | Condensing Unit Mounting Pad 16 x 36 x 3 | ☐ ULTRILITE1 |
| Muffler | Muffler | ☐ MAC-002MF-E |
| Snow/Rain Diverter | SnowRain Diverter | ☐ SRD-3 |
| Stand | 24 Single Fan Stand | ☐ QSMS2401M |
| | 18 Single Fan Stand | ☐ QSMS1801M |
| | Condenser Wall Bracket | ☐ QSWB2000M-1 |
| | Outdoor Unit Stand 12 High | ☐ QSMS1201M |
| | Condenser Wall Bracket - Stainless Steel Finish | ☐ QSWBSS |
| | Outdoor Unit 3-14 inch Mounting Base Pair - Plastic | ☐ DSD-400P |
| **Notes** | | |


© 2026 Mitsubishi Electric Trane HVAC US LLC. All rights reserved.

*MLZ-KX09NL - U1*
*MLZ-KX12NL - U1*
*MLZ-KX18NL - U1*

## INDOOR UNIT OUTLINE DRAWING

(TOP VIEW)

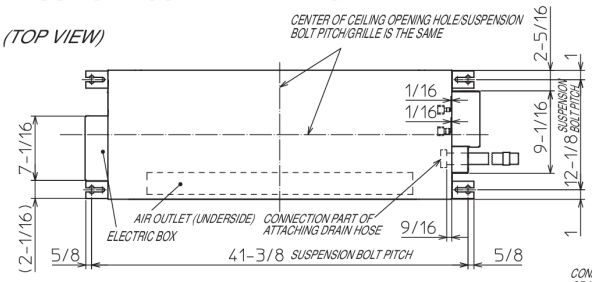


(FRONT VIEW)

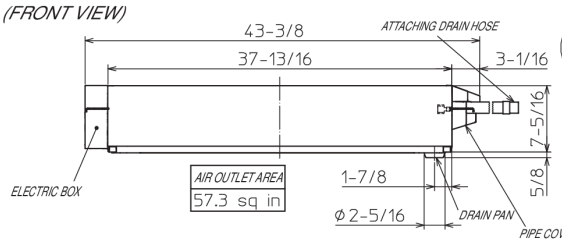


## REMOTE CONTROLLER OUTLINE DRAWING

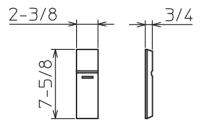


(RIGHT SIDE VIEW)

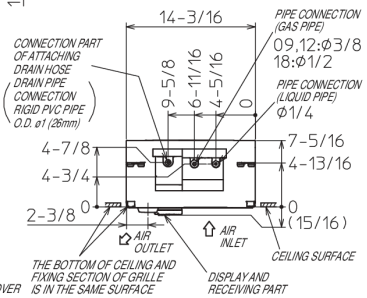


## GRILLE OUTLINE DRAWING
(MLP-449WU)

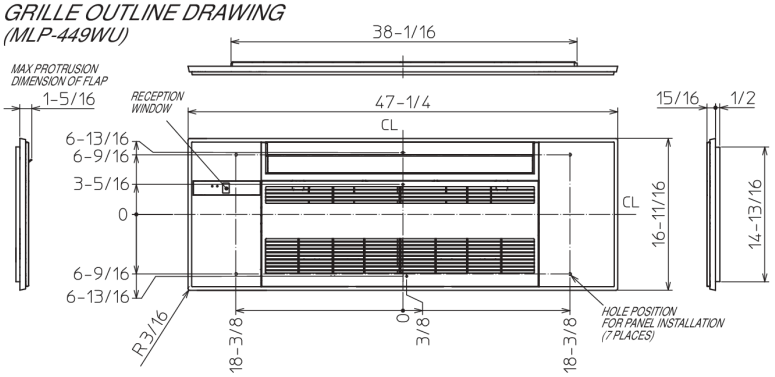


| | | KX09/12NL | KX18NL |
|---|---|---|---|
| EXTENSION PIPE | LIQUID PIPE O.D. | ø1/4 | |
| | GAS PIPE O.D. | ø3/8 | ø1/2 |
| CONNECTIONG OF PIPE | LIQUID PIPE | FLARED CONNECTION ø1/4 | |
| | GAS PIPE | FLARED CONNECTION ø3/8 | FLARED CONNECTION ø1/2 |
| DRAIN HOSE | | HEAT INSULATER O.D. ø1-1/4 / CONNECTION I.D. ø1 | EFFECTIVE LENGTH 18-7/8 |
| DRAIN PIPE CONNECTION | | RIGID PVC PIPE O.D. ø1 (26mm) | |

NOTE 1. CUT THE DRAIN HOSE (ACCESSORY) FOR USE, IF NECESSARY.

## INDOOR UNIT DETAIL VIEW
(TOP VIEW)

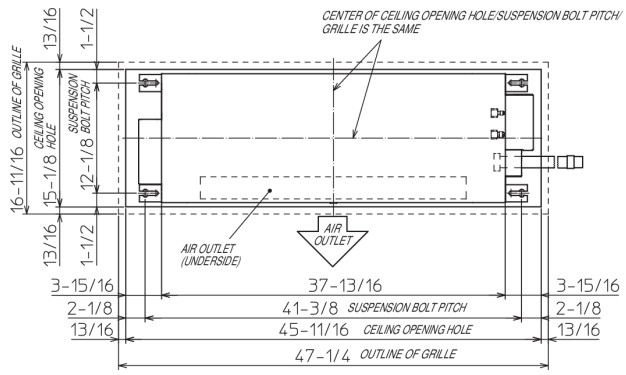


(FRONT VIEW)

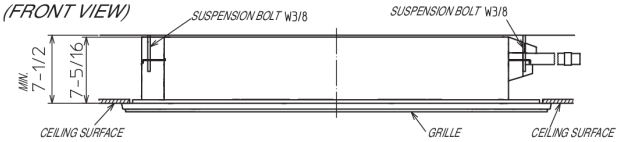


THE METHOD FOR STANDING DRAIN FROM INDOOR UNIT
* CUT THE DRAIN HOSE (ACCESSORY) FOR USE, IF NECESSARY.

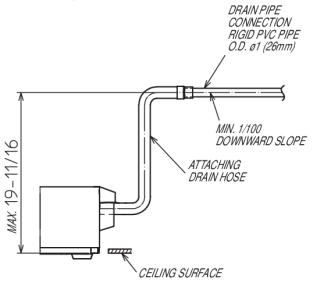



© 2026 Mitsubishi Electric Trane HVAC US LLC. All rights reserved.

# OUTDOOR UNIT DIMENSIONS: SUZ-AA18NLHZ

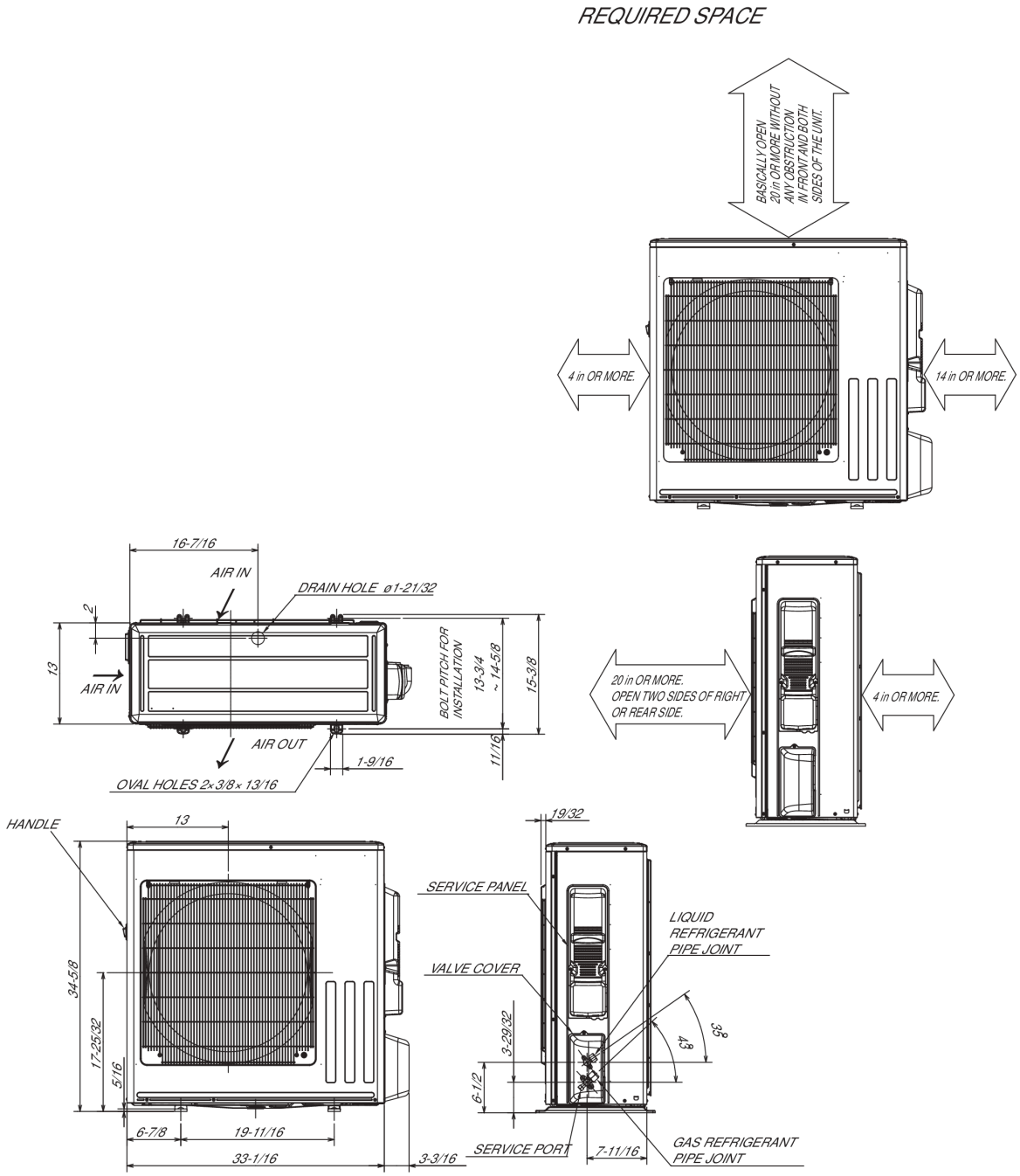


| | | |
|---|---|---|
| REFRIGERANT PIPE JOINT | LIQUID REFRIGERANT PIPE | FLARED ø6.35 (1/4") |
| | GAS REFRIGERANT PIPE | AA09/12 : FLARED ø9.52 (3/8")<br>AA15/18 : FLARED ø12.7 (1/2")<br>AA24/30/36 : FLARED ø15.88 (5/8") |


1340 Satellite Boulevard Suwanee, GA 30024
Toll Free: 800-433-4822 · mitsubishicomfort.com


METUS_2026-08_PROPIN


Specifications are subject to change without notice.
© 2026 Mitsubishi Electric Trane HVAC US LLC. All rights reserved.