MLZ-KX12NL & SUZ-AA12NLHZ
11,300 BTU/H CEILING-MOUNTED INDOOR UNIT
12,000 BTU/H HYPER HEAT PUMP OUTDOOR UNIT

Job Name:			
System Reference:		**Date:**	

INDOOR Unit ... MLZ-KX12NL

OUTDOOR Unit ... SUZ-AA12NLHZ

INDOOR UNIT FEATURES

- Wi-Fi Included: A factory-supplied Wireless Interface Adapter is included with the indoor unit for field installation.
- Dual Barrier Coating: Dual Barrier Coating reduces the collection of contaminants like dust, fibers, smoke, and oil on the inner surface of the indoor unit.
- Smart Set: Smart Set conveniently adjusts to the preferred preset temperature by pressing a single button on the remote control.
- Auto Vane Control: Auto Vane Control directs outlet vanes to move left, right, up, and down. This airflow control provides even temperatures throughout a space.
- Econo Cool: Econo Cool is feature that temporarily adjusts the airflow to maintain comfort while using less energy.

OUTDOOR UNIT FEATURES

- H2i® Hyper-Heating: 100% heating capacity down to 5° F .
- Inverter Driven Compressor: Inverter technology uses only the precise amount of energy needed to keep a space comfortable.
- Blue Fin Coating: Anti-corrosion coating that protects the outdoor heat exchanger against salt, sulfur, and other airborne contaminants that impact the efficiency and performance of the outdoor units.
- Base Pan Heater: This advanced base pan heater helps to prevent interrupted operation due to water freezing after a defrost cycle, ensuring your warmth and comfort during colder weather.
- Seacoast Protection: An anti-corrosion treatment applied to the aluminum fins of the heat exchanger of the outdoor unit to protect against corrosion caused by salt, sulfur, and other airborne contaminants, especially in coastal and industrial areas.

© 2026 Mitsubishi Electric Trane HVAC US LLC. All rights reserved.

SPECIFICATIONS: MLZ-KX12NL & SUZ-AA12NLHZ

Cooling at 95F[1]	Maximum Capacity	Btu/h	12000
	Rated Capacity	Btu/h	12000
	Minimum Capacity	Btu/h	2900
	Maximum Power Input	W	900
	Rated Power Input	W	900
	Moisture Removal	Pints/h	2.90
	Sensible Heat Factor		0.73
	Power Factor [208V / 230V]	%	96 / 96
Heating at 47F[2]	Maximum Capacity	Btu/h	18000
	Rated Capacity	Btu/h	15000
	Minimum Capacity	Btu/h	7900
	Maximum Power Input	W	1790
	Rated Power Input	W	1330
	Power Factor [208V / 230V]	%	96 / 96
Heating at 17F[3]	Maximum Capacity	Btu/h	15000
	Rated Capacity	Btu/h	9500
	Maximum Power Input	W	1950
	Rated Power Input	W	1140
Heating at 5F[5]	Maximum Capacity	Btu/h	15000
	Maximum Power Input	W	2198
Heating at -13F[9]	Maximum Capacity	Btu/h	9000
Efficiency	SEER2		16.70
	EER2[1]		13.30
	HSPF2 [IV]		9.60
	COP at 47°F[2]		3.30
	COP at 17°F at Maximum Capacity[3]		2.20
	COP at 5°F at Maximum Capacity[5]		2.00
	COP at -13°F at Maximum Capacity[9]		1.42
	ENERGY STAR® Certified		Yes
Electrical	Voltage, Phase, Frequency	V AC / V AC , ø , Hz	208 / 230 , 1 , 60
	Guaranteed Voltage Range	V AC	198 - 253
	Voltage: Indoor - Outdoor, S1-S2	V AC	208/230
	Voltage: Indoor - Outdoor, S2-S3	V DC	12-24
	Short-circuit Current Rating [SCCR]	kA	5
	Recommended Fuse/Breaker Size (Outdoor)	A	30
	Recommended Wire Size [Indoor - Outdoor]	AWG	14
Indoor Unit	MCA	A	1
	Fan Motor Output	W	30
	Fan Motor Type		DC Motor
	Airflow Rate at Cooling, Dry	CFM	212 , 258 , 297 , 332
	Airflow Rate at Heating, Dry	CFM	212 , 272 , 311 , 350
	Sound Pressure Level [Cooling]	dB (A)	27 , 32 , 36 , 40
	Sound Pressure Level [Heating]	dB (A)	26 , 32 , 36 , 40
	Drain Pipe Size O.D.	inch [mm]	1-1/16 [26]
	Condensate Lift Mechanism, Max Height	inch [mm]	19-11/16 [500]
	Dual Barrier Coating on Fan		Yes
	Unit Dimensions (W x D x H)	inch x inch x inch [mm x mm x mm]	43-3/8 x 14-3/16 x 7-5/16 [1102 x 360 x 185]
	Package Dimensions (W x D x H)	inch x inch x inch [mm x mm x mm]	46-3/8 x 11-3/16 x 15-3/4 [1177 x 284 x 400]
	Unit Weight	lbs [kg]	34 [15.50]
	Package Weight	lbs [kg]	42 [19]
IDU Operating Temp. Range	Cooling Intake Air Temp [Maximum / Minimum]	°FDB , °FWB / °FDB , °FWB	90 , 73 / 66 , 59
	Heating Intake Air Temp [Maximum / Minimum]	°FDB	83 / 50
Outdoor Unit	MCA	A	25
	MOCP	A	42
	Fan Motor Output	W	50

Notes

[1]Cooling at 95°F (Indoor // Outdoor) °F 80 DB, 67 WB // 95 DB, 75 WB
[2]Heating at 47°F (Indoor // Outdoor) °F 70 DB, 60 WB // 47 DB, 43 WB
[3]Heating at 17°F (Indoor // Outdoor) °F 70 DB, 60 WB // 17 DB, 15 WB
[5]Heating at 5°F (Indoor // Outdoor) °F 70 DB, 60 WB // 5 DB, 4 WB
[9]Heating at -13°F (Indoor // Outdoor) °F 70 DB, 60 WB // -13 DB, -14 WB
[*]Indoor/Outdoor Unit Operating Temperature Range (Cooling Air Temp [Maximum / Minimum]): • Applications should be restricted to comfort cooling only; equipment cooling applications are not recommended for low ambient temperature conditions.
[**]Outdoor Unit Operating Temperature Range (Cooling Thermal Lock-out / Re-start Temperatures; Heating Thermal Lock-out / Re-start Temperatures): • System cuts out in heating mode and automatically restarts at these temperatures.

© 2026 Mitsubishi Electric Trane HVAC US LLC. All rights reserved.

Outdoor Unit	Airflow Rate Cooling	CFM	2193
	Airflow Rate Heating	CFM	1949
	Defrost Method		Reverse Cycle
	Coating on Heat Exchanger (Bluefin, Sea Coast)		Yes , Yes
	Sound Pressure Level, Cooling[1]	dB (A)	54
	Sound Pressure Level, Heating[2]	dB (A)	55
	Compressor Type		Twin Rotary
	Compressor Model		SRB172FQHMT
	Compressor Oil [Type // Charge]	// oz	RM68EH // 14.54
	External Finish Color		Munsell No.3Y 7.8/1.1
	Base Pan Heater		Built-in
	Unit Dimensions (W x D x H)	inch x inch x inch [mm x mm x mm]	33-1/16 x 13 x 34-5/8 [840 x 330 x 880]
	Package Dimensions (W x D x H)	inch x inch x inch [mm x mm x mm]	38-5/8 x 16-9/16 x 39 [980 x 420 x 990]
	Unit Weight	lbs [kg]	115 [52.16]
	Package Weight	lbs [kg]	133 [60.33]
ODU Operating Temp. Range	Cooling Intake Air Temp [Maximum / Minimum*]	°FDB	115 / 14
	Cooling Thermal Lock-out / Re-start Temperatures**	°FDB	-1 / 3
	Heating Intake Air Temp [Maximum / Minimum]	°FDB , °FWB / °FDB , °FWB	75 , 65 / -13 , -14
	Heating Thermal Lock-out / Re-start Temperatures**	°FDB	-22.5 / -14
Refrigerant	Type		R454B
	Pre-Charged Refrigerant Amount	lbs	3
	Maximum Pre-Charged Piping Length	ft [m]	25 [7.60]
	Additional Refrigerant Charge Per Additional Piping Length	oz/ft	0.22
Piping	Liquid Pipe Size O.D. [Flared]	inch [mm]	1/4 [6.35]
	Gas Pipe Size O.D. [Flared]	inch [mm]	3/8 [9.52]
	Maximum Piping Length	ft [m]	100 [30]
	Maximum Height Difference	ft [m]	50 [15]
	Maximum Number of Bends		10

Notes

[1]Cooling at 95°F (Indoor // Outdoor) °F 80 DB, 67 WB // 95 DB, 75 WB
[2]Heating at 47°F (Indoor // Outdoor) °F 70 DB, 60 WB // 47 DB, 43 WB
[3]Heating at 17°F (Indoor // Outdoor) °F 70 DB, 60 WB // 17 DB, 15 WB
[5]Heating at 5°F (Indoor // Outdoor) °F 70 DB, 60 WB // 5 DB, 4 WB
[9]Heating at -13°F (Indoor // Outdoor) °F 70 DB, 60 WB // -13 DB, -14 WB
[*]Indoor/Outdoor Unit Operating Temperature Range (Cooling Air Temp [Maximum / Minimum]): • Applications should be restricted to comfort cooling only; equipment cooling applications are not recommended for low ambient temperature conditions.
[**]Outdoor Unit Operating Temperature Range (Cooling Thermal Lock-out / Re-start Temperatures; Heating Thermal Lock-out / Re-start Temperatures): • System cuts out in heating mode and automatically restarts at these temperatures.

© 2026 Mitsubishi Electric Trane HVAC US LLC. All rights reserved.

INDOOR UNIT ACCESSORIES: MLZ-KX12NL

Condensate	Refco Condensate Pump 100-240V up to 120k BTU/h	☐	COMBI
	Blue Diamond MegaBlue Condensate Pump with Reservoir Sensor 115-230V up to 170k BTU/h	☐	X87-835
	Blue Diamond MaxiBlue Condensate Pump with Reservoir Sensor 115-230V up to 48k BTU/h	☐	X88-721
	Sauermann Condensate Pump 120-230V up to 60k BTU/h	☐	SI30-230
	Blue Diamond MaxiBlue Advanced Mini Condensate Pump w Reservoir Sensor 110V up to 48000 BTUH recommended	☐	X87-711
	Blue Diamond Sensor Extension Cable 15 Ft	☐	C13-103
	Blue Diamond MicroBlue Mini Condensate Pump 110208230V up to 18000 BTUH	☐	X86-003
Control Interface	IT Extender	☐	PAC-WHS01IE-E
	kumo station® for Comfort app	☐	PAC-WHS01HC-E
	Procon BACnet® and Modbus® Interface	☐	PAC-UKPRC001-CN-1
	Airzone Wired Blueface Controller Black	☐	AZZBSBLUEZEROCN
	Airzone Wireless Think Controller White	☐	AZZBSTHINKRB
	Airzone Wireless Lite Controller White	☐	AZZBSLITERB
	Wireless Interface 2 for Comfrot app	☐	PAC-USWHS002-WF-2
	M-NET adapter ²	☐	MAC-334IF-E
	Airzone Wireless Think Controller Black	☐	AZZBSTHINKRN
	Airzone Wired Blueface Controller White	☐	AZZBSBLUEZEROCB
	Airzone Wireless Lite Controller Black	☐	AZZBSLITERN
	Thermostat Interface for 3rd Party Thermostats	☐	PAC-US445CN-1
Disconnect Switch	30A600VUL fits 2 X 4 utility box - White	☐	TAZ-MS303W
	30A600VUL fits 2 X 4 utility box - Black	☐	TAZ-MS303
Drain Hose	Flexible Mini-Split Drain Hose	☐	DRX-16
Filter	Anti-allergy Enzyme Filter	☐	MAC-408FT-E
	Microparticle Filter	☐	MAC-EMF515FT-E
Grille	Grille (Decoration panel)	☑	MLP-449WU-U1
Lineset	50 x 1/4 x 50 3/8 Lineset Twin-Tube Insulation	☐	MLS143812T-50
	15 x 1/4 x 15 3/8 Lineset Twin-Tube Insulation	☐	MLS143812T-15
	65 x 1/4 x 65 3/8 Lineset Twin-Tube Insulation	☐	MLS143812T-65
	30 x 1/4 x 30 3/8 Lineset Twin-Tube Insulation	☐	MLS143812T-30
Remote Sensor	Wireless temperature and humidity sensor for Comfort app	☐	PAC-USWHS003-TH-1
	Remote Temperature Sensor for MFZ MLZ and MSZ models	☐	M21EAA307
Terminal Signal Adapter	Backup Heat Relay Kit	☐	CN24RELAY-KIT-CM3
Wired Remote Controller	Simple Direct Wired Remote Controller	☐	PAC-SDW01RC-1
	Touch MA Remote Controller ¹	☐	PAR-CT01MAU-SB
	Deluxe Wired MA Remote Controller ¹	☐	PAR-42MAAUB
	Simple MA Remote Controller ¹	☐	PAC-YT53CRAU-J
Wireless Remote Controller	Wireless RedLINK™ Remote Controller	☐	MHK2
	Lockdown Bracket for Wireless Handheld Remote Controllers	☐	RCMKP1CB

Notes

[2]Allows IDU Connection to MA Controller: *Deluxe MA Remote Controller *Simple MA Controller *Touch MA Controller
[1]Requires MAC-334IF-E Interface to connect MA controller

© 2026 Mitsubishi Electric Trane HVAC US LLC. All rights reserved.

OUTDOOR UNIT ACCESSORIES: SUZ-AA12NLHZ

Air Outlet Guide	Air Outlet Guide	☐ MAC-890SG-E
Control/Service Tool	Maintenance Tool Interface	☐ PAC-USCMS-MN-1
	M- & P-Series Maintenance Tool Cable Set	☐ M21EC0397
Drain Socket	Drain Socket	☐ MAC-871DS
Hail Guards	Hail Guard	☐ HG-A7
Mini-Split Wire	14 Gauge 4 wire MiniSplit Cable50 ft roll	☐ S144-50
	14 Gauge 4 wire MiniSplit Cable250 ft roll	☐ S144-250
	14 Gauge 4 wire Armored MiniSplit Cable250 ft roll	☐ SW144-250
	14 Gauge 4 wire Armored MiniSplit Cable50 ft roll	☐ SW144-50
Mounting Pad	Condensing Unit Mounting Pad 16 x 36 x 3	☐ ULTRILITE1
Muffler	Muffler	☐ MAC-001MF-E
Port Adaptor	Adaptor 1/2 x 3/8	☐ PAC-SK88RJ-E
Snow/Rain Diverter	SnowRain Diverter	☐ SRD-3
Stand	Condenser Wall Bracket - Stainless Steel Finish	☐ QSWBSS
	Outdoor Unit Stand 12 High	☐ QSMS1201M
	24 Single Fan Stand	☐ QSMS2401M
	Outdoor Unit 3-14 inch Mounting Base Pair - Plastic	☐ DSD-400P
	Condenser Wall Bracket	☐ QSWB2000M-1
	18 Single Fan Stand	☐ QSMS1801M
Notes		

© 2026 Mitsubishi Electric Trane HVAC US LLC. All rights reserved.

MLZ-KX09NL - U1
MLZ-KX12NL - U1
MLZ-KX18NL - U1

INDOOR UNIT OUTLINE DRAWING

(TOP VIEW)

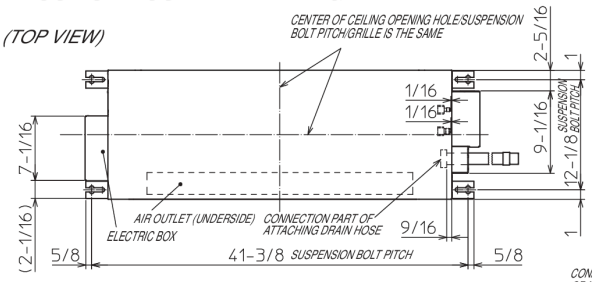

(FRONT VIEW)

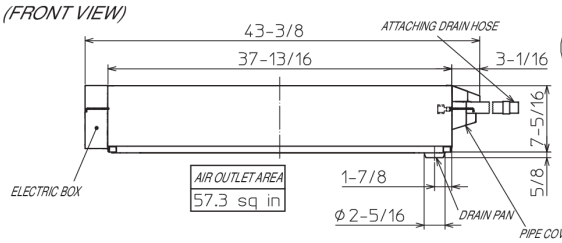

REMOTE CONTROLLER OUTLINE DRAWING

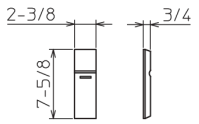

(RIGHT SIDE VIEW)

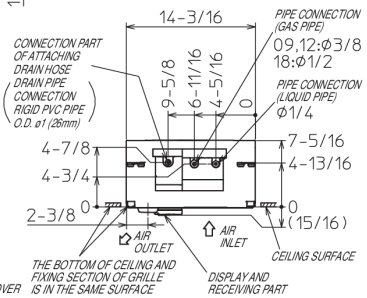

GRILLE OUTLINE DRAWING
(MLP-449WU)

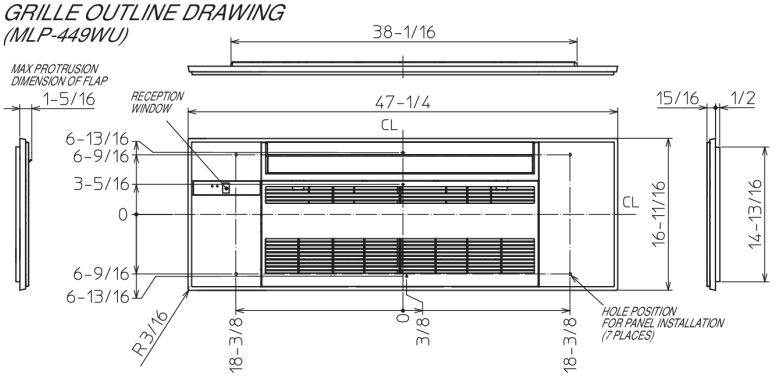

		KX09/12NL	KX18NL
EXTENSION PIPE	LIQUID PIPE O.D.	ø1/4	
	GAS PIPE O.D.	ø3/8	ø1/2
CONNECTIONG OF PIPE	LIQUID PIPE	FLARED CONNECTION ø1/4	
	GAS PIPE	FLARED CONNECTION ø3/8	FLARED CONNECTION ø1/2
DRAIN HOSE		HEAT INSULATER O.D. ø1-1/4 / CONNECTION I.D. ø1	EFFECTIVE LENGTH 18-7/8
DRAIN PIPE CONNECTION		RIGID PVC PIPE O.D. ø1 (26mm)	

NOTE 1. CUT THE DRAIN HOSE (ACCESSORY) FOR USE, IF NECESSARY.

INDOOR UNIT DETAIL VIEW
(TOP VIEW)

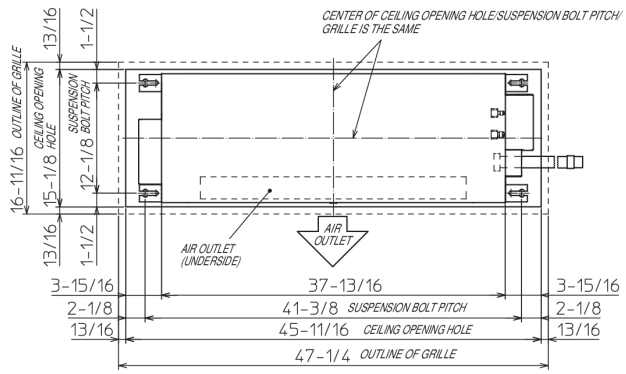

(FRONT VIEW)

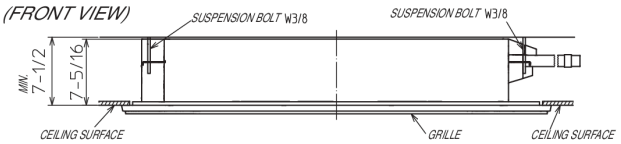

THE METHOD FOR STANDING DRAIN FROM INDOOR UNIT
* CUT THE DRAIN HOSE (ACCESSORY) FOR USE, IF NECESSARY.

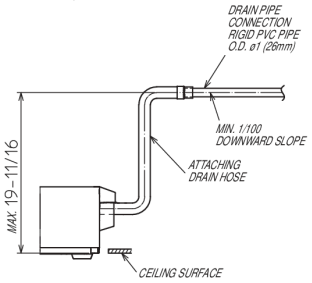

© 2026 Mitsubishi Electric Trane HVAC US LLC. All rights reserved.

OUTDOOR UNIT DIMENSIONS: SUZ-AA12NLHZ

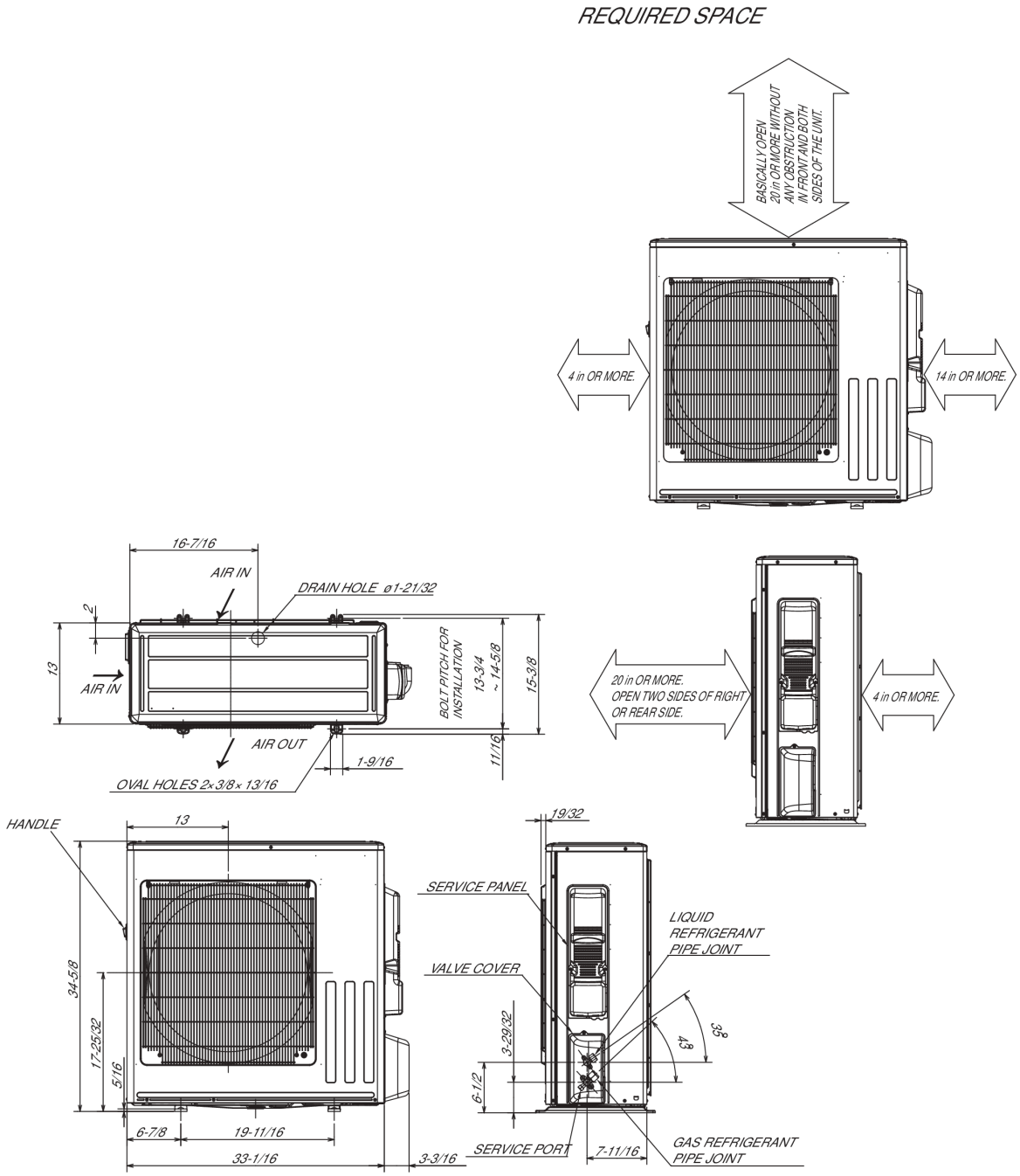

REFRIGERANT PIPE JOINT	LIQUID REFRIGERANT PIPE	FLARED ø6.35 (1/4")
	GAS REFRIGERANT PIPE	AA09/12 : FLARED ø9.52 (3/8") AA15/18 : FLARED ø12.7 (1/2") AA24/30/36 : FLARED ø15.88 (5/8")

1340 Satellite Boulevard Suwanee, GA 30024
Toll Free: 800-433-4822 · mitsubishicomfort.com

METUS_2026-08_PROPIN

Specifications are subject to change without notice.
© 2026 Mitsubishi Electric Trane HVAC US LLC. All rights reserved.