MFZ-KX12NL & SUZ-AA12NL
12,000 BTU/H FLOOR-MOUNTED INDOOR UNIT
12,000 BTU/H HEAT PUMP OUTDOOR UNIT

Job Name:			
System Reference:		**Date:**	

INDOOR Unit ... MFZ-KX12NL

OUTDOOR Unit ... SUZ-AA12NL

INDOOR UNIT FEATURES

- Auto Vane Control: Auto Vane Control directs outlet vanes to move left, right, up, and down. This airflow control provides even temperatures throughout a space.
- Rapid Heat Technology: Rapid Heat Technology intuitively increases the room temperature to the desired temperature quickly.
- Wi-Fi Built-in: Wi-Fi enabled units pair with the Comfort app for complete control over temperature, fan speeds, modes, schedules, and more.
- Multi-flow Vane Control: Multi-flow Vane Control intelligently directs air throughout a space for even temperature distribution.
- Powerful Mode: Powerful Mode adjusts fan speed to quickly bring your room to your desired comfort.
- Five Speed Fan: Adjust the fan between five speed settings to optimal comfort.

OUTDOOR UNIT FEATURES

- Inverter Driven Compressor: Inverter technology uses only the precise amount of energy needed to keep a space comfortable.
- Blue Fin Coating: Anti-corrosion coating that protects the outdoor heat exchanger against salt, sulfur, and other airborne contaminants that impact the efficiency and performance of the outdoor units.
- Seacoast Protection: An anti-corrosion treatment applied to the aluminum fins of the heat exchanger of the outdoor unit to protect against corrosion caused by salt, sulfur, and other airborne contaminants, especially in coastal and industrial areas.

© 2026 Mitsubishi Electric Trane HVAC US LLC. All rights reserved.

SPECIFICATIONS: MFZ-KX12NL & SUZ-AA12NL

Cooling at 95F[1]	Maximum Capacity	Btu/h	12000
	Rated Capacity	Btu/h	12000
	Minimum Capacity	Btu/h	2500
	Maximum Power Input	W	950
	Rated Power Input	W	950
	Moisture Removal	Pints/h	1.90
	Sensible Heat Factor		0.82
	Power Factor [208V / 230V]	%	96 / 96
Heating at 47F[2]	Maximum Capacity	Btu/h	15000
	Rated Capacity	Btu/h	15000
	Minimum Capacity	Btu/h	4700
	Maximum Power Input	W	1240
	Rated Power Input	W	1240
	Power Factor [208V / 230V]	%	97 / 97
Heating at 17F[3]	Maximum Capacity	Btu/h	9700
	Rated Capacity	Btu/h	9700
	Maximum Power Input	W	1020
	Rated Power Input	W	1020
Heating at 5F[5]	Maximum Capacity	Btu/h	7800
	Maximum Power Input	W	1143
Heating at -4F[6]	Maximum Capacity	Btu/h	6600
Efficiency	SEER2		19.60
	EER2[1]		12.60
	HSPF2 [IV]		8.70
	COP at 47°F[2]		3.50
	COP at 17°F at Maximum Capacity[3]		2.70
	COP at 5°F at Maximum Capacity[5]		2.00
	COP at -4°F at Maximum Capacity[6]		2.19
	ENERGY STAR® Certified		Yes
Electrical	Voltage, Phase, Frequency	V AC / V AC , ø , Hz	208 / 230 , 1 , 60
	Guaranteed Voltage Range	V AC	198 - 253
	Voltage: Indoor - Outdoor, S1-S2	V AC	208/230
	Voltage: Indoor - Outdoor, S2-S3	V DC	12-24
	Short-circuit Current Rating [SCCR]	kA	5
	Recommended Fuse/Breaker Size (Outdoor)	A	15
	Recommended Wire Size [Indoor - Outdoor]	AWG	14
Indoor Unit	MCA	A	1
	Fan Motor Output	W	30
	Fan Motor Type		DC Motor
	Airflow Rate at Cooling, Dry	CFM	138 , 198 , 272 , 360 , 417
	Airflow Rate at Cooling, Wet	CFM	117 , 168 , 231 , 306 , 354
	Airflow Rate at Heating, Dry	CFM	138 , 191 , 254 , 328 , 417
	Sound Pressure Level [Cooling]	dB (A)	21 , 27 , 34 , 41 , 46
	Sound Pressure Level [Heating]	dB (A)	21 , 27 , 34 , 40 , 46
	Dual Barrier Coating on Heat Exchanger		No
	Dual Barrier Coating on Fan		No
	Unit Dimensions (W x D x H)	inch x inch x inch [mm x mm x mm]	29-1/2 x 8-7/16 x 23-5/8 [750 x 215 x 600]
	Package Dimensions (W x D x H)	inch x inch x inch [mm x mm x mm]	32-11/16 x 11-3/16 x 27-9/16 [830 x 300 x 700]
	Unit Weight	lbs [kg]	33 [15]
	Package Weight	lbs [kg]	40 [18]
IDU Operating Temp. Range	Cooling Intake Air Temp [Maximum / Minimum]	°FDB , °FWB / °FDB , °FWB	90 , 73 / 66 , 59
	Heating Intake Air Temp [Maximum / Minimum]	°FDB	83 / 50
Outdoor Unit	MCA	A	14
	MOCP	A	23
	Fan Motor Output	W	55

Notes

[1]Cooling at 95°F (Indoor // Outdoor) °F 80 DB, 67 WB // 95 DB, 75 WB
[2]Heating at 47°F (Indoor // Outdoor) °F 70 DB, 60 WB // 47 DB, 43 WB
[3]Heating at 17°F (Indoor // Outdoor) °F 70 DB, 60 WB // 17 DB, 15 WB
[5]Heating at 5°F (Indoor // Outdoor) °F 70 DB, 60 WB // 5 DB, 4 WB
[*]Indoor/Outdoor Unit Operating Temperature Range (Cooling Air Temp [Maximum / Minimum]): • Applications should be restricted to comfort cooling only; equipment cooling applications are not recommended for low ambient temperature conditions.
[**]Outdoor Unit Operating Temperature Range (Cooling Thermal Lock-out / Re-start Temperatures; Heating Thermal Lock-out / Re-start Temperatures): • System cuts out in heating mode and automatically restarts at these temperatures.
[6]Heating at -4°F (Indoor // Outdoor) °F 70 DB, 60 WB // -4 DB, -5 WB

© 2026 Mitsubishi Electric Trane HVAC US LLC. All rights reserved.

Outdoor Unit	Airflow Rate Cooling	CFM	1229
	Airflow Rate Heating	CFM	1172
	Defrost Method		Reverse Cycle
	Coating on Heat Exchanger (Bluefin, Sea Coast)		Yes , Yes
	Sound Pressure Level, Cooling[1]	dB (A)	49
	Sound Pressure Level, Heating[2]	dB (A)	51
	Compressor Type		Twin Rotary
	Compressor Model		SRB092FQFMC
	Compressor Oil [Type // Charge]	// oz	RM68EH // 11.80
	External Finish Color		Munsell No.3Y 7.8/1.1
	Base Pan Heater		Optional
	Unit Dimensions (W x D x H)	inch x inch x inch [mm x mm x mm]	31-1/2 x 11-1/4 x 21-5/8 [800 x 285 x 550]
	Package Dimensions (W x D x H)	inch x inch x inch [mm x mm x mm]	37-1/16 x 15 x 24-13/16 [940 x 380 x 630]
	Unit Weight	lbs [kg]	81 [37]
	Package Weight	lbs [kg]	88.18 [40]
ODU Operating Temp. Range	Cooling Intake Air Temp [Maximum / Minimum*]	°FDB	115 / 14
	Cooling Thermal Lock-out / Re-start Temperatures**	°FDB	-1 / 3
	Heating Intake Air Temp [Maximum / Minimum]	°FDB , °FWB / °FDB , °FWB	75 , 65 / -4 , -5
	Heating Thermal Lock-out / Re-start Temperatures**	°FDB	-14 / -4
Refrigerant	Type		R454B
	Pre-Charged Refrigerant Amount	lbs	2
	Maximum Pre-Charged Piping Length	ft [m]	65 [7.60]
	Additional Refrigerant Charge Per Additional Piping Length	oz/ft	0
Piping	Liquid Pipe Size O.D. [Flared]	inch [mm]	1/4 [6.35]
	Gas Pipe Size O.D. [Flared]	inch [mm]	3/8 [9.52]
	Maximum Piping Length	ft [m]	65 [19.80]
	Maximum Height Difference	ft [m]	40 [12.10]
	Maximum Number of Bends		10

Notes

[1]Cooling at 95°F (Indoor // Outdoor) °F 80 DB, 67 WB // 95 DB, 75 WB
[2]Heating at 47°F (Indoor // Outdoor) °F 70 DB, 60 WB // 47 DB, 43 WB
[3]Heating at 17°F (Indoor // Outdoor) °F 70 DB, 60 WB // 17 DB, 15 WB
[5]Heating at 5°F (Indoor // Outdoor) °F 70 DB, 60 WB // 5 DB, 4 WB
[*]Indoor/Outdoor Unit Operating Temperature Range (Cooling Air Temp [Maximum / Minimum]): • Applications should be restricted to comfort cooling only; equipment cooling applications are not recommended for low ambient temperature conditions.
[**]Outdoor Unit Operating Temperature Range (Cooling Thermal Lock-out / Re-start Temperatures; Heating Thermal Lock-out / Re-start Temperatures): • System cuts out in heating mode and automatically restarts at these temperatures.
[6]Heating at -4°F (Indoor // Outdoor) °F 70 DB, 60 WB // -4 DB, -5 WB

© 2026 Mitsubishi Electric Trane HVAC US LLC. All rights reserved.

INDOOR UNIT ACCESSORIES: MFZ-KX12NL

Condensate	Blue Diamond MegaBlue Condensate Pump with Reservoir Sensor 115-230V up to 170k BTU/h	☐	X87-835
	Blue Diamond MaxiBlue Condensate Pump with Reservoir Sensor 115-230V up to 48k BTU/h	☐	X88-721
	Blue Diamond Sensor Extension Cable 15 Ft	☐	C13-103
	Refco Condensate Pump 100-240V up to 120k BTU/h	☐	COMBI
	Blue Diamond MaxiBlue Advanced Mini Condensate Pump w Reservoir Sensor 110V up to 48000 BTUH recommended	☐	X87-711
	Sauermann Condensate Pump 120-230V up to 60k BTU/h	☐	SI30-230
	Blue Diamond MicroBlue Mini Condensate Pump 110208230V up to 18000 BTUH	☐	X86-003
Control Interface	IT Extender	☐	PAC-WHS01IE-E
	kumo station® for Comfort app	☐	PAC-WHS01HC-E
	Procon BACnet® and Modbus® Interface	☐	PAC-UKPRC001-CN-1
	Airzone Wireless Think Controller White	☐	AZZBSTHINKRB
	Thermostat Interface for 3rd Party Thermostats	☐	PAC-US445CN-1
	Wireless Interface 2 for Comfrot app	☐	PAC-USWHS002-WF-2
	Airzone Wireless Lite Controller White	☐	AZZBSLITERB
	Airzone Wireless Think Controller Black	☐	AZZBSTHINKRN
	Airzone Wireless Lite Controller Black	☐	AZZBSLITERN
	M-NET adapter ²	☐	MAC-334IF-E
	Airzone Wired Blueface Controller Black	☐	AZZBSBLUEZEROCN
	Airzone Wired Blueface Controller White	☐	AZZBSBLUEZEROCB
Disconnect Switch	30A600VUL fits 2 X 4 utility box - White	☐	TAZ-MS303W
	30A600VUL fits 2 X 4 utility box - Black	☐	TAZ-MS303
Drain Hose	Flexible Mini-Split Drain Hose	☐	DRX-16
Filter	Anti-allergy Enzyme Filter	☐	MAC-408FT-E
Floor Mount Air Guide	Floor Mount Air Guide	☐	MAC-760FD-E
Lineset	30 x 1/4 x 30 3/8 Lineset Twin-Tube Insulation	☐	MLS143812T-30
	15 x 1/4 x 15 3/8 Lineset Twin-Tube Insulation	☐	MLS143812T-15
	65 x 1/4 x 65 3/8 Lineset Twin-Tube Insulation	☐	MLS143812T-65
	50 x 1/4 x 50 3/8 Lineset Twin-Tube Insulation	☐	MLS143812T-50
Remote Sensor	Wireless temperature and humidity sensor for Comfort app	☐	PAC-USWHS003-TH-1
	Remote Temperature Sensor for MFZ MLZ and MSZ models	☐	M21EAA307
Terminal Signal Adapter	Backup Heat Relay Kit	☐	CN24RELAY-KIT-CM3
Wired Remote Controller	Simple Direct Wired Remote Controller	☐	PAC-SDW01RC-1
	Deluxe Wired MA Remote Controller ¹	☐	PAR-42MAAUB
	Simple MA Remote Controller ¹	☐	PAC-YT53CRAU-J
	Touch MA Remote Controller ¹	☐	PAR-CT01MAU-SB
Wireless Remote Controller	Lockdown Bracket for Wireless Handheld Remote Controllers	☐	RCMKP1CB
	Wireless RedLINK™ Remote Controller	☐	MHK2

Notes

[1]Requires MAC-334IF-E Interface to connect MA controller
[2]Allows IDU Connection to MA Controller: *Deluxe MA Remote Controller *Simple MA Controller *Touch MA Controller

© 2026 Mitsubishi Electric Trane HVAC US LLC. All rights reserved.

OUTDOOR UNIT ACCESSORIES: SUZ-AA12NL

Air Outlet Guide	Air Outlet Guide	MAC-881SG-E
Centralized Drain Pan	Centralized Drain Pan	PAC-SG63DP-E
Control/Service Tool	M- & P-Series Maintenance Tool Cable Set	M21EC0397
	Maintenance Tool Interface	PAC-USCMS-MN-1
Drain Socket	Drain Socket	MAC-871DS
Hail Guards	Hail Guard	HG-B4
Mini-Split Wire	14 Gauge 4 wire Armored MiniSplit Cable50 ft roll	SW144-50
	14 Gauge 4 wire MiniSplit Cable50 ft roll	S144-50
	14 Gauge 4 wire MiniSplit Cable250 ft roll	S144-250
	14 Gauge 4 wire Armored MiniSplit Cable250 ft roll	SW144-250
Mounting Pad	Condensing Unit Mounting Pad 16 x 36 x 3	ULTRILITE1
Muffler	Muffler	MAC-001MF-E
Optional Defrost Heater	Base Heater	MAC-650BH-U
Port Adaptor	Adaptor 1/2 x 3/8	PAC-SK88RJ-E
Snow/Rain Diverter	SnowRain Diverter	SRD-1
Stand	Outdoor Unit 3-14 inch Mounting Base Pair - Plastic	DSD-400P
	Outdoor Unit Stand 12 High	QSMS1201M
	24 Single Fan Stand	QSMS2401M
	Condenser Wall Bracket	QSWB2000M-1
	Condenser Wall Bracket - Stainless Steel Finish	QSWBSS
	18 Single Fan Stand	QSMS1801M

Notes

© 2026 Mitsubishi Electric Trane HVAC US LLC. All rights reserved.

INDOOR UNIT DIMENSIONS: MFZ-KX12NL

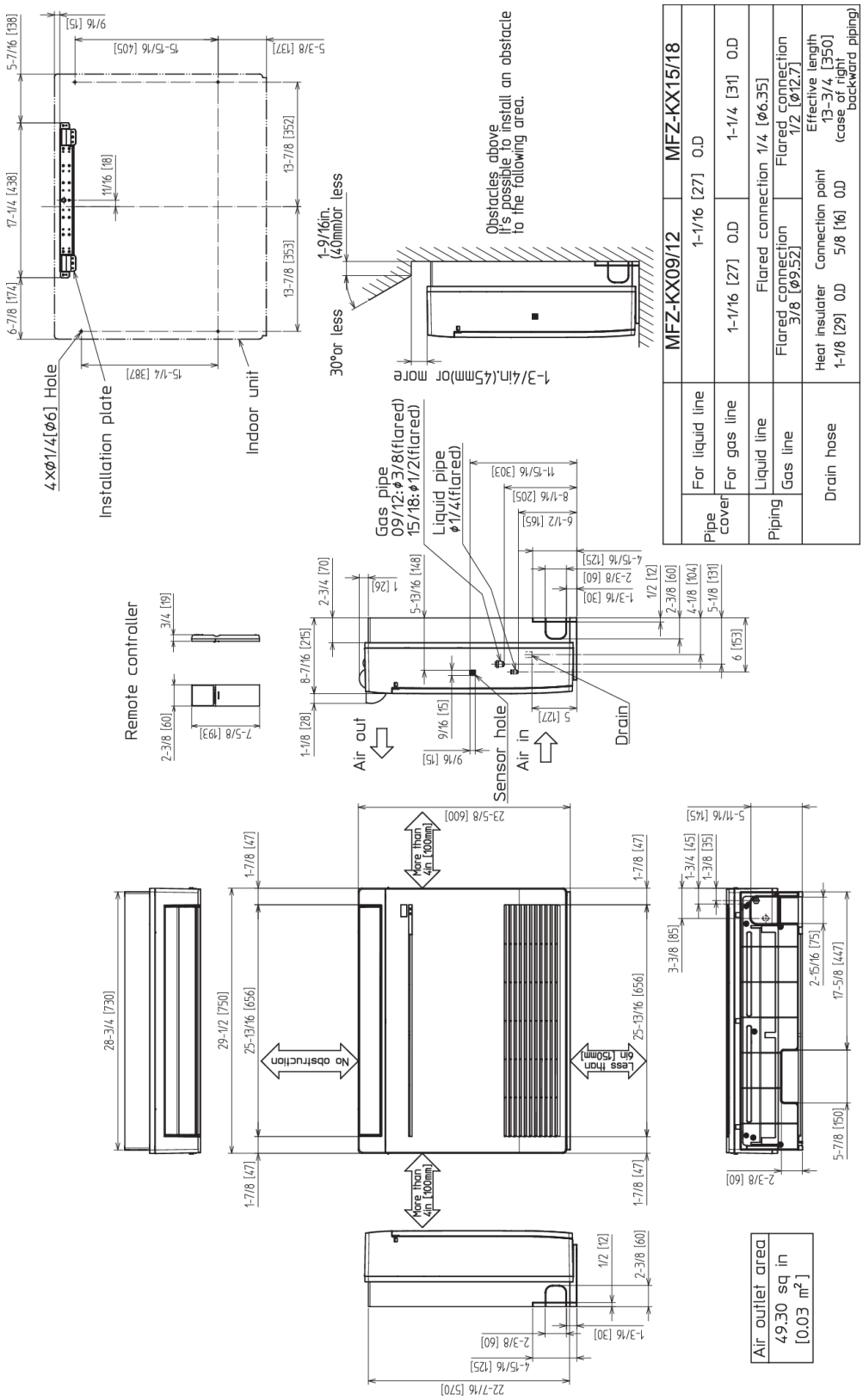

		MFZ-KX09/12	MFZ-KX15/18
Pipe cover	For liquid line	1-1/16 [27] O.D	
	For gas line	1-1/16 [27] O.D	1-1/4 [31] O.D
Piping	Liquid line	Flared connection 1/4 [Ø6.35]	
	Gas line	Flared connection 3/8 [Ø9.52]	Flared connection 1/2 [Ø12.7]
Drain hose		Heat insulater Connection point 1-1/8 [29] O.D 5/8 [16] O.D	Effective length 13-3/4 [350] (case of right backward piping)

MFZ-KX09NL-U1
MFZ-KX12NL-U1
MFZ-KX15NL-U1
MFZ-KX18NL-U1

© 2026 Mitsubishi Electric Trane HVAC US LLC. All rights reserved.

OUTDOOR UNIT DIMENSIONS: SUZ-AA12NL

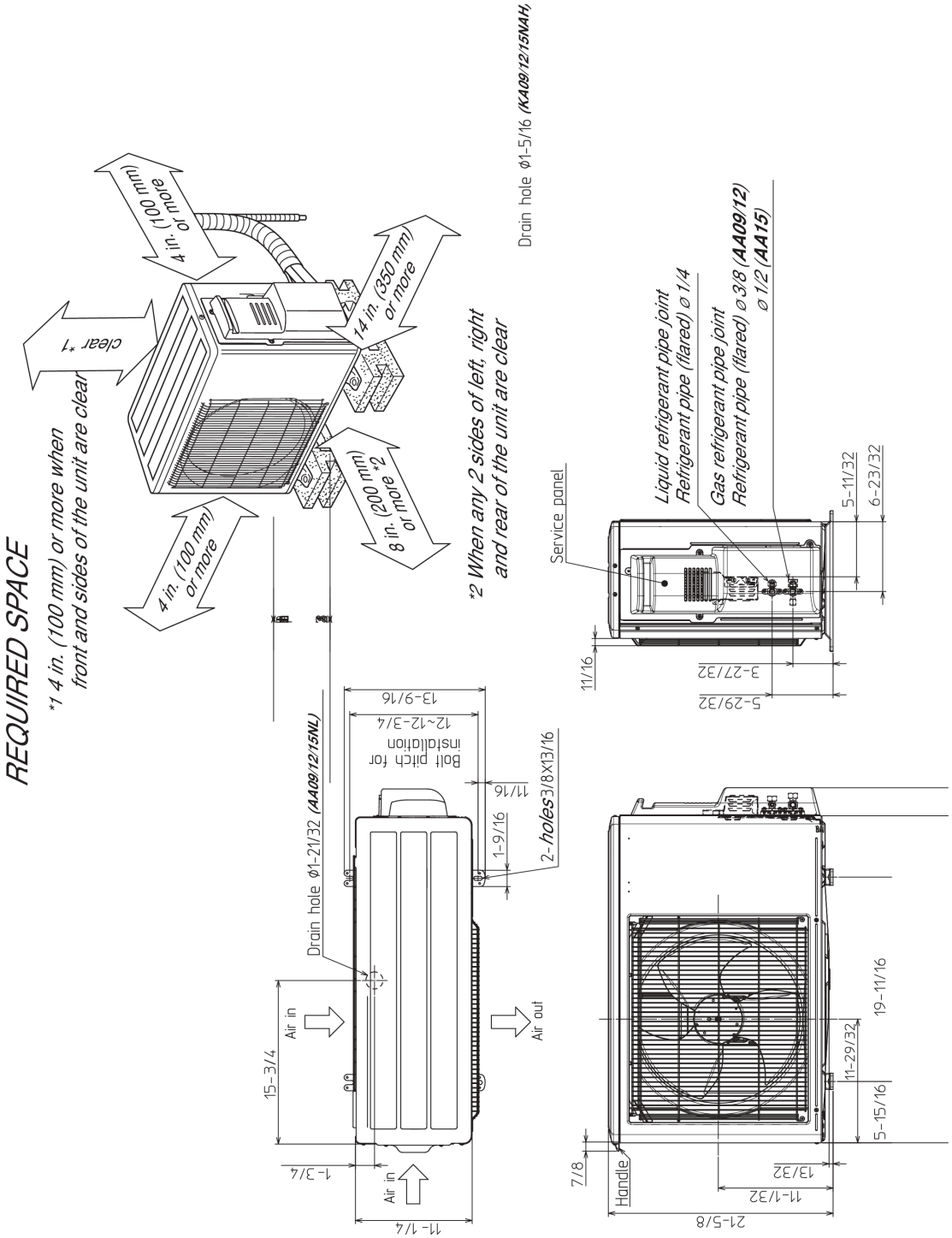

1340 Satellite Boulevard Suwanee, GA 30024
Toll Free: 800-433-4822 · mitsubishicomfort.com

METUS_2026-08_PROPIN

Specifications are subject to change without notice.

© 2026 Mitsubishi Electric Trane HVAC US LLC. All rights reserved.